RESILIENT BRIDGEPORT

Record of Decision

Contents

Summary 1
1.0 Introduction and Proposed Action 2
2.0 Project Purpose, Need and Objectives 4
3.0 Alternatives Considered 4
4.0 Summary of Environmental Impacts 6
5.0 Programmatic Agreement 11
6.0 Comments on Final EIS 12
7.0 Decision 13
8.0 Mitigation Measures to Avoid or Minimize Harm 14
9.0 Monitoring/Enforcement and Ongoing Coordination 20
10.0 Approval 21
Attachment 1: Resilient Bridgeport Project Component Areas
Attachment 2: Programmatic Agreement
Attachment 3: Public and Agency Comments on the FEIS

Record of Decision

Resilient Bridgeport: National Disaster Resilience and Rebuild by Design Projects
City of Bridgeport, Connecticut

SUMMARY

This Record of Decision (ROD) documents the Connecticut Department of Housing's (CT DOH) decision to proceed with the Selected Alternative of the Resilient Bridgeport: National Disaster Resilience and Rebuild by Design (NDR RBD) Project (the Proposed Action) as described in the Preferred Alternative of the Final Environmental Impact Statement (FEIS) dated August 2019. The Selected Alternative is the environmentally preferable alternative. It consists of the construction of the Rebuild by Design Pilot Project and the Flood Risk Reduction Project along the Preferred Alternative 1 alignment (see Attachment 1) and the creation of a Resilience Center. The Selected Alternative of the Proposed Action protects residents, property, and infrastructure assets from future storm surge events and chronic flooding during high-frequency rainfall events by lowering the risk of acute and chronic flooding. It protects life and public health by providing dry egress during emergencies. It also educates the public about flood risks and sea level rise. This ROD is the final step in the National Environmental Policy Act (NEPA) process.

The U.S. Department of Housing and Urban Development (HUD) allocated supplemental Community Development Block Grant-Disaster Recovery funds (CDBG-DR) through the Rebuild by Design competition and Community Development Block Grant – National Disaster Resilience (CDBG-NDR) to the CT DOH under the Disaster Relief Appropriations Act of 2013 (Pub. L. 113–2) and Federal Register Notices 79 FR 62182 and 81 FR 36557 for the purpose of assisting recovery in the most impacted and distressed areas declared a major disaster due to Hurricane Sandy. The CT DOH is acting under the authority of the U.S. Department of Housing and Urban Development's (HUD) regulations at 24 Code of Federal Regulations (CFR) § 58.4 as the Responsible Entity, and as the lead agency responsible for environmental review and decision-making, including obligations under Section 106 of the National Historic Preservation Act of 1966 (16 United States Code [USC] §§ 470 et seq, and 54 USC § 306108) and its implementing regulations 36 CFR Part 800. The CT DOH is the Certifying Officer for the ROD and HUD Release of Funds. The ROD has been prepared in accordance with NEPA (42 USC §§ 4321 et seq.), the Council on Environmental Quality (CEQ) regulations implementing NEPA at 40 CFR Parts 1500-1508, Executive Order 11988 (Floodplain Management), Executive Order 12898 (Environmental Justice), and the National Historic Preservation Act of 1966 (NHPA) and its implementing regulations (36 CFR Part 800).

A Notice of Intent to prepare a Draft Environmental Impact Statement (DEIS) was published in the Federal Register on February 27, 2018—which formally began the NEPA review process by initiating the public scoping period for the DEIS. A public scoping meeting was held on March 14, 2018, where material was presented to the community. Comments were received at that meeting, and substantive comments were incorporated into a Final Public Scoping Document (published June 2018), which informed the development of the DEIS. The DEIS was made available to the public for comment in early 2019 with the publication of the Notice of Availability (NOA) of the DEIS on February 1, 2019 beginning a 45-day public review and comment period. A formal public hearing for the DEIS was held on February 26, 2019, followed by a design workshop. On September 6, 2019, the Final Environmental Impact Statement (FEIS) was made available for public review.

CT DOH coordinated compliance with Section 106 and NEPA, pursuant to 36 CFR § 800.8, through the preparation of a Historic and Archaeological Resources Evaluation Report submitted to CT SHPO in May 2018 and the development of cultural resource specific recommendations for inclusion within the FEIS so that Section 106 recommendations were considered during the analysis of alternatives as part of the NEPA EIS processes as well as consultation with Connecticut State Historic Preservation Office (CT SHPO) and invited consulting parties. A copy of the draft final Programmatic Agreement (PA) between the CT DOH and the CT SHPO – which included the resolution of adverse effects to historic properties under NHPA and detailed consultation with invited consulting parties, Tribes with an interest in the area of potential effects, and the Advisory Council on Historic Preservation (ACHP) - was appended to the FEIS for public review and comment. The public review period was initiated with the U.S. Environmental Protection Agency's (US EPA) publication of the NOA of the FEIS in the Federal Register, and the CT DOH's publication of the NOA of the FEIS in three newspapers of general circulation within the study area. The FEIS was made available for public review until October 7, 2019, via the following web addresses: www.ResilientBridgeport.com and https://portal.ct.gov/doh/doh/Sandy-Pages/Sandy-Programs/NDRC. Hard copies of the FEIS were also made available for review at the office of the CT DOH and four public facilities in and around the study area.

Based on thorough alternatives development, scoping, and impact analyses, this ROD establishes the CT DOH's decision to select the Preferred Alternative in the FEIS as the Selected Alternative in this ROD for implementation of the Proposed Action in compliance with NEPA and coordinated compliance with Section 106 of the NHPA (36 CFR § 800.8) as the environmentally preferable alternative. To avoid, minimize, and mitigate adverse environmental impacts anticipated to result from construction and operation of the Proposed Action, the CT DOH further adopts the list of mitigation measures and best management practices (BMPs) included in this ROD. A copy of the executed PA between CT DOH and CT SHPO is included with this ROD (see Attachment 2). The CT DOH will continue to coordinate with Federal, State, and local agencies and the general public as it pursues final design and construction of the Proposed Action.

This ROD will be available for a 15-day public comment period, which begins following the publication of the Notice of Record of Decision and Intent to Request Release of Funds in three newspapers local to the study area (i.e., Only In Bridgeport, La Voz (Spanish language), CT Post). That notice outlines the methods by which interested parties may provide comments on the ROD; comments received by November 10, 2019 11:59pm EST will be considered prior to authorizing submission of a Request for Release of Funds and Environmental Certification to HUD.

1.0 INTRODUCTION AND PROPOSED ACTION

As described above, the Connecticut Department of Housing (CT DOH) prepared a Final Environmental Impact Statement (FEIS) for the Resilient Bridgeport: National Disaster Resilience and Rebuild by Design Project (the Proposed Action). Funding for these projects are provided by HUD's Community Development Block Grant Disaster Recovery (CDBG-DR) National Disaster Resilience (NDR) and Rebuild by Design (RBD) funding allocations to the CT DOH as part of HUD's response to the devastation following Superstorm Sandy. Summarized below and detailed in the FEIS are the Proposed Action for the project study area, the purpose and need for the Proposed Action, the alternatives analysis for alternatives considered, evaluation of the impacts of those alternatives, and identification of a Preferred Alternative for the Proposed Action.

The FEIS for the Proposed Action included a thorough analysis of the potential physical, cultural, environmental, and socioeconomic impacts of the alternatives. This ROD documents the CT DOH's decision to select the Preferred Alternative in the FEIS as the Selected Alternative in this ROD for implementation of the Proposed Action in compliance with NEPA as the environmentally preferable alternative. In making its decision, the CT DOH carefully considered the conclusions of the FEIS as well as the comments received from Federal, State, and local agencies, organizations, and the general public during the preparation of the FEIS.

Proposed Action

The Resilient Bridgeport Proposed Action consists of three projects located within the South End of Bridgeport, Connecticut:

- **RBD Pilot Project** at the Marina Village public housing site (to provide stormwater management and dry egress);
- **Flood Risk Reduction Project** on the east side consisting of a coastal flood defense system to reduce risk from acute storm events and a combination of natural/green and fortified/gray infrastructure solutions; and
- A **Resilience Center** to educate and facilitate increased resiliency within the community.

Study Area

The study area (see Attachment 1) is situated within the South End neighborhood of the city of Bridgeport, a peninsula of the Connecticut coastal region located between Cedar Creek, the Long Island Sound, and Bridgeport Harbor. On the northern end, the study area is bound by the Connecticut Department of Transportation (CT DOT) New Haven Line railroad tracks. The South End neighborhood is susceptible to chronic flooding conditions due to a combination of inadequate stormwater infrastructure in the area and its coastal location. The population includes public housing residents and other vulnerable populations. The city of Bridgeport is considered a distressed municipality per Connecticut Department of Economic and Community Development criteria; therefore, the city of Bridgeport and the study area is considered an Environmental Justice Community.

The study area includes multifamily residential, utility, institutional, and open space land uses. The Marina Village site (to be identified as the governmentally-assisted affordable housing redevelopment site for the Windward Apartments), currently consists of medium-density public housing. The Bridgeport Harbor Generating Station, a Public Service Enterprise Group (PSEG) Power Connecticut LLC-owned energy generating facility occupies the eastern portion of the study area along the Pequonnock River (Bridgeport Harbor). Adjacent to the PSEG facility are light industrial facilities including the Bridgeport Energy natural gas power plant owned by Cogentrix LLC, the Singer substation owned by United Illuminating, and the current location and identified future location of the Pequonnock Substation owned by United Illuminating. The southern portion of the study area consists of the historic, 325-acre Seaside Park, which continues west following the Long Island Sound. To the north of Seaside Park, in the middle of the study area is the University of Bridgeport. The 86-acre campus has an enrollment of approximately 5,400 students and over 500 faculty members. A fuel-cell micro-grid, which can run independently and serves as a power source for critical services and shelters during emergencies, is located at the university.

2.0 PROJECT PURPOSE, NEED AND OBJECTIVES

The purpose of the Proposed Action is to create a more resilient South End community, support its long-term viability, and improve health and safety for the community's vulnerable populations. The principal targeted outcomes follow:

- Lower the risk of acute and chronic flooding
- Provide dry egress during emergencies
- Educate the public about flood risks and sea level rise

Minimizing the flooding at roadways leading into and out of the South End is vital to resident egress and emergency evacuation. Repetitive flooding of local streets occurs in the valleys and low-lying areas caused by both rainfall runoff and storm surge, making the streets impassable. Improving the existing drainage system is important to minimize internal flooding and to manage stormwater in both high- and low-frequency storm events. Ensuring the continuity of operations at the power-district scale is critical to maintaining industrial and commercial functions in the city. As the likelihood of storm events increase and sea levels rise, long-term resiliency will require educating the community about the risks of rising sea level, ways to increase preparedness levels ahead of future flood events, and resources available to address short-term and long-term recovery needs. Addressing the risk of storm and coastal flooding in the area creates the first layer of protection, creating opportunities to address larger economic and community efforts that support resiliency in the long term.

The Proposed Action is needed to protect residents, property, and infrastructure assets from future storm surge events and chronic flooding during high-frequency rainfall events. In addition to lowering the risk of chronic and acute flooding in the study area, the Proposed Action is needed to directly protect life, public health, and property in the study area by allowing for dry egress in emergency situations.

3.0 ALTERNATIVES CONSIDERED

To identify the alternatives that were evaluated in the FEIS, each Resilient Bridgeport project underwent an alternatives evaluation process through which alternatives selection criteria were developed and then used to comparatively screen potential alternatives (described in detail in Chapter 3 of the FEIS). This evaluation process eliminated some of the alternatives from further study and refined the alternatives that were analyzed in the Draft Environmental Impact Statement (DEIS). The DEIS included a Western and an Eastern option for the north-south section of the alignment of the coastal flood defense system of the Flood Risk Reduction project. In the FEIS, in place of the Western and Eastern options, four alternatives for the alignment of the north-south section of coastal flood defense system were brought forward for further evaluation. A Preferred Alternative, which largely follows the Eastern alignment, was selected among the four alternatives based on response to public comment and input from private property owners. Based on the results of the alternatives analysis in the DEIS and further consultation with stakeholders, the Preferred Alternative was also selected for the other projects that are part of the Proposed Action.

No Action Alternative

Under the No Action Alternative there would be no measures to address either coastal storm surge or rainfall flood risk reduction. In addition, there would be no measures to educate the public about flood risks or sea level rise. As a result, there would be no negative environmental impacts related to construction; no impacts to visual or historic resources within the South End. However, this alternative would not meet the project purpose. There would be no flood risk reduction from either acute or chronic flooding in the South End; therefore, risk of flooding and the associated health and safety implications would remain. There would be no new raised egress within the South End; therefore, residents would continue to be stranded during regular rainfall and storm events and emergency vehicles would continue to have issues accessing the neighborhoods. Development opportunities in the South End would continue to be limited due to risk of flooding and damage to property. In addition, there would be no investment in historic resources in the neighborhood and no new community facility or open space resource.

Although the No Action Alternative is not a reasonable or prudent solution and is not recommended by CT DOH or HUD, it is required to be evaluated pursuant to Council on Environmental Quality regulations. As such, this alternative was included in the FEIS and used as a baseline against which the effects of this Proposed Action were compared.

RBD Pilot Project

The RBD Pilot Project was selected from a list of potential projects that would form a complementary system for decreasing chronic and acute flooding within the South End of Bridgeport and be a visible example of resilient planning in a coastal environment. An iterative process of team workshops, public events, and stakeholder meetings guided the selection of a pilot project. The RBD Pilot Project specifically aims to facilitate the redevelopment of public housing in the Marina Village/Windward Apartments site by reducing the flood risk to those parcels in both acute and chronic flooding events. The project includes installing diverse types of stormwater detention methods and flooding prevention methods. Following the project identification, additional feasibility analysis and stakeholder engagement clarified the scope and depth of the Preferred Alternative of the RBD Pilot Project in the FEIS.

Flood Risk Reduction Project

Alternatives were developed for establishing the South End East Resilience Network – a combination of measures within the South End that would reduce the flood risk within the project area from future coastal surge and chronic rainfall events. Raising streets were considered to provide dry egress during emergencies, a Flood Risk Reduction Project consisting of a coastal flood defense system with associated internal drainage management strategies was considered for lowering the risk of acute and chronic flooding.

The alternatives screening process for the coastal flood defense system first determined a general approach to the system, then identified potential flood reduction elements, and finally screened potential alignment options against selected criteria. The two general approaches for creating a coastal flood defense system that were evaluated were 1) Edge Alignment Approach (a coastal flood defense system in the water or on-land along the water's edge) and 2) Integrated Alignment Approach (combination of both the edge alignment and raised street approaches). The Integrated Alignment Approach was identified as likely to meet more of the goals and objectives and was selected as the preferred approach.

Options for the various components of the coastal flood defense system (flood control structures such as floodwalls and raised streets, green stormwater infrastructure) were considered as part of the alternatives evaluation. Next, alignment segment combinations were identified and screened.

The DEIS included a Western and an Eastern option for the north-south section of the alignment of the coastal flood defense system of the Flood Risk Reduction Project. Based on feedback from stakeholders and public comment on the DEIS, four alternative alignments within the area bounded by the Eastern and Western options in the DEIS were brought forward for further evaluation in the FEIS. Alternative 1 was selected as the Preferred Alternative (see map in Attachment 1) and largely follows the Eastern alignment from the DEIS with small changes to where it crosses between the Bridgeport Energy/PSEG and 60 Main Street/PSEG property lines. There was no alternative alignment in the FEIS that followed the Western alignment option from the DEIS due to public comment on the DEIS from the community regarding its impacts to Main Street and a finding of adverse effect to the William D. Bishop Cottage Development Historic District by the State Historic Preservation Office.

Resilience Center

An alternatives screening process that incorporated community input was used to refine the Resilience Center specifications. The attributes of the alternatives for a Resilience Center were varied by form from multiple kiosks integrated within public spaces in the community to a new, free-standing building, and by function from full emergency response capabilities to education and outreach. Data were collected to assess the community's needs. Considering the objectives, original NDR Action Plan definitions, conceptual considerations, funds allocated, and community response, the project details were refined.

The Preferred Alternative in the FEIS would provide funding to The Mary and Eliza Freeman Center for History and Community to support renovations of a community space within the Mary and Eliza Freeman Houses complex that would provide a location in the South End that would operate as a community center, a central location for resilience information dissemination, and a location that could store supplies to assist the community with recovery efforts during or after shock events. The project would also construct an open-air landscaped site, including green infrastructure improvements, north of University Avenue at Main Street near the entrance to Seaside Park.

4.0 SUMMARY OF ENVIRONMENTAL IMPACTS

Table 1 presents a summary of the direct and indirect impacts of the No Action Alternative and Proposed Action with the Preferred Alternative 1 for the alignment of the coastal flood defense system on the resources that were analyzed.

Table 1. Environmental Consequences

RESOURCE	PROPOSED ACTION		
	RBD PILOT PROJECT	FLOOD RISK REDUCTION	RESILIENCE CENTER
Land Use, Zoning and Public Policy	■ **Direct:** No adverse impacts. No changes to land use or zoning. ■ **Indirect**: Long-term indirect benefits to existing land uses from added dry egress and green space, and reduced flood risk. ■ Consistent with public policies related to improving coastal resiliency and reducing community vulnerability.	■ **Direct:** No significant adverse impacts. No changes to land use; easements on private property required. No changes to zoning. ■ **Indirect**: Long-term indirect benefits to existing land uses from added dry egress and reduced flood risk. ■ Consistent with public policies related to improving coastal resiliency and reducing community vulnerability.	■ **Direct:** No adverse impacts. No changes to land use or zoning. ■ **Indirect**: No impacts. ■ Consistent with coastal resiliency goal of the City of Bridgeport.
Socioeconomics	■ **Direct:** No significant direct adverse impacts. Temporary impacts may occur during construction. ■ **Indirect**: Long-term indirect benefits to residents and businesses by facilitating construction of Phase II of Windward Development public housing and promoting investment in the area.	■ **Direct:** No significant direct adverse impacts. Temporary impacts may occur during construction. ■ **Indirect**: Long-term indirect benefits to residents and businesses by facilitating development of 60 Main Street and promoting investment in the area by decreasing area of flood risk by 64 acres.	■ **Direct:** Minor, temporary impacts may occur during construction. ■ **Indirect**: No indirect impacts to residents and businesses.
Environmental Justice	■ **Direct:** No significant direct adverse impacts. Temporary impacts to air quality, noise and transportation during construction. Following construction, direct beneficial impacts to traffic and open space. No disproportionate adverse impacts to EJ communities. ■ **Indirect**: Long-term indirect benefits to the EJ community with dry egress and stormwater improvements that would facilitate construction of low-income housing.	■ **Direct:** No significant direct adverse impacts. Temporary impacts to air quality, noise and transportation during construction. Following construction, adverse impacts to visual resources. No disproportionate adverse impacts to EJ communities. ■ **Indirect**: Long-term indirect benefits to the EJ community with dry egress and reduced flood risk that would provide additional housing and commercial options for EJ populations.	■ **Direct:** No significant direct adverse impacts. Temporary impacts may occur during construction. Direct benefits following construction by providing a community facility and improving public safety and visual resource. No disproportionate impacts to EJ communities. ■ **Indirect**: Long-term indirect benefits to the EJ community through resiliency education and restoring African-American resource.

RESOURCE	PROPOSED ACTION		
	RBD PILOT PROJECT	FLOOD RISK REDUCTION	RESILIENCE CENTER
Cultural Resources	**Direct:** No direct adverse impacts to historical architecture. Potential adverse impacts to archaeological resources to be mitigated through additional investigation and monitoring. ■ **Indirect**: Long-term indirect benefits by protecting resources from future flooding events.	■ **Direct:** Direct adverse impact to National Register listed Seaside Park to be mitigated with Programmatic Agreement. Potential adverse impacts to archaeological resources to be mitigated through additional investigation and monitoring. ■ **Indirect**: Long-term indirect benefits by protecting resources from future flooding events.	■ **Direct:** Direct beneficial impact to the NR-listed Freeman Houses. Potential adverse impacts to archaeological resources to be mitigated through additional investigation and monitoring. ■ **Indirect**: No indirect impacts.
Urban Design and Visual Resources	■ **Direct:** Temporary impacts may occur during construction. Beneficial impacts to the overall viewshed and Seaside Village with construction of stormwater facility. ■ **Indirect**: Beneficial indirect impacts due to construction of new development in place of dilapidated buildings.	■ **Direct:** Temporary impacts may occur during construction. No significant adverse impacts. Some obstructed views of Seaside Park; improved aesthetics along University Avenue and from elevated view of waterfront, as well as new landscaping features. **Indirect**: No indirect impact.	■ **Direct:** Temporary impacts may occur during construction. Beneficial impacts to the viewsheds near the Freeman Houses and Seaside Park entrance. ■ **Indirect**: No indirect impact.
Hazardous Materials	**Direct:** Direct adverse impacts during construction due to disturbance of contaminated soil or groundwater would be mitigated through BMPs. No adverse impacts in the long-term. ■ **Indirect**: Indirect benefits to public health from removal and disposal of contaminated materials.	**Direct:** Direct adverse impacts during construction due to disturbance of contaminated soil or groundwater would be mitigated through BMPs. No adverse impacts in the long-term. ■ **Indirect**: Indirect benefits to public health from removal and disposal of contaminated materials.	■ **Direct:** Limited adverse impacts may occur during construction. ■ **Indirect**: No indirect impact.
Noise and Vibration	■ **Direct:** Mitigation measures would be implemented to minimize the temporary impacts that may occur during construction. No long-term direct impacts. ■ **Indirect**: Minor adverse indirect impact from traffic generated by Windward Development on new Johnson Road extension.	■ **Direct:** Mitigation measures would be implemented to minimize the temporary impacts that may occur during construction. No long-term direct impacts. ■ **Indirect**: Minor adverse indirect impact from traffic generated by 60 Main Street development with reconfigured street network.	■ **Direct:** Temporary, less than significant impacts may occur during construction. Potential adverse effects on the Freeman Houses due to damage from vibration would be managed through a Historic Resource Construction Protection Plan. No long-term direct impacts. ■ **Indirect**: No indirect impact.

RESOURCE	PROPOSED ACTION		
	RBD PILOT PROJECT	FLOOD RISK REDUCTION	RESILIENCE CENTER
Natural Resources	■ **Direct:** Minor adverse impacts to ecological communities resulting from repair and recommissioning work at Outfall E. No effect to T&E species. Limited, temporary displacement of urban wildlife. Long-term beneficial impact from trees and vegetation planted for stormwater facility. ■ **Indirect**: Long-term indirect benefits from expansion of the urban forest canopy and reduction of the pollutant load entering aquatic environments.	**Direct:** Temporary impacts may occur during construction. Minor adverse impacts due to removal of street trees and repair of existing outfall(s). No effect to T&E species. Limited, temporary displacement of urban wildlife. ■ **Indirect**: Long-term indirect benefits from reduction of the pollutant load entering aquatic environments.	■ **Direct:** No significant direct adverse impacts. Temporary impacts may occur during construction. ■ **Indirect**: No indirect impacts.
Geology and Soils	■ **Direct:** Temporary adverse impact during construction from excavation and filling. ■ **Indirect**: Long-term indirect benefits due to decrease in impervious surface and increase in vegetated area.	■ **Direct:** Temporary adverse impact during construction from excavation and filling. ■ **Indirect**: Long-term benefits from reduced flood risk that would stabilize geologic conditions and soils.	■ **Direct:** No direct impact. ■ **Indirect**: No indirect impact.
Hydrology and Flooding	■ **Direct:** No significant direct adverse impacts. Long-term beneficial impacts from dry egress and stormwater improvements. ■ **Indirect**: No indirect impacts.	■ **Direct:** No significant direct adverse impacts. Long-term beneficial impact with reduced flooding risk to 64 acres. ■ **Indirect**: No indirect impacts.	■ **Direct:** No direct Impacts. ■ **Indirect**: No indirect impact.
Water Resources	■ **Direct:** Temporary adverse impact during construction. No significant direct adverse impacts. Long-term beneficial impacts to Cedar Creek due to stormwater improvements. ■ **Indirect**: Long-term indirect benefits to surrounding water bodies.	■ **Direct:** Temporary adverse impact during construction. No significant direct adverse impacts. Long-term beneficial impacts to Bridgeport Harbor due to stormwater improvements. ■ **Indirect**: Long-term indirect benefits to surrounding water bodies.	■ **Direct:** No direct impact. ■ **Indirect**: No indirect impact.

RESOURCE	PROPOSED ACTION		
	RBD PILOT PROJECT	FLOOD RISK REDUCTION	RESILIENCE CENTER
Coastal Zone	■ **Direct:** No long-term direct adverse impacts. Reduced impervious surface and improved infiltration rates and enhanced visual quality. Temporary impacts during construction because of work within the Coastal Zone would be minimized by best management practices included in project design and construction plans. ■ **Indirect** Long-term indirect benefits due to reduced occurrence of CSO events. ■ Consistent with the Connecticut Coastal Management Act	■ **Direct:** No long-term significant direct adverse impacts. Impacts to vegetation. Reduced area of coastal flooding hazard (64 acres) and reduced discharge to surface waters. Temporary impacts during construction because of work within the Coastal Zone would be minimized by best management practices included in project design and construction plans. ■ **Indirect**: Long-term indirect benefits due to improved drainage, reduced occurrence of CSO events, and improvements to water quality. ■ Consistent with the Connecticut Coastal Management Act	■ **Direct:** No direct adverse Impacts. ■ **Indirect**: No indirect impacts. ■ Consistent with the Connecticut Coastal Management Act
Infrastructure	■ **Direct:** No significant direct adverse impacts to utilities and infrastructure. Temporary impacts may occur during construction including temporary disruption of utility services service and road closures. Long-term benefits to stormwater infrastructure. ■ **Indirect**: Minor indirect impacts associated with increased usage from future development.	■ **Direct:** No significant direct adverse impacts to utilities and infrastructure. Temporary impacts may occur during construction including temporary disruption of utility services service and road closures. Long-term benefits to stormwater infrastructure, and under the Preferred Alternative, long-term benefits to utility providers. ■ **Indirect**: Minor indirect impacts associated with increased usage from future development.	■ **Direct:** No significant direct adverse impacts. Temporary impacts may occur during construction. ■ **Indirect**: No indirect impacts.
Community Facilities and Services	■ **Direct:** No significant direct adverse impacts. Temporary impacts may occur during construction. ■ **Indirect**: Long-term, beneficial impacts to public health and safety with dry egress.	■ **Direct:** No significant direct adverse impacts. Temporary impacts may occur during construction. ■ **Indirect**: Long-term beneficial impacts to public health and safety with dry egress and coastal flood defense system.	■ **Direct:** Direct beneficial impacts with new community facility within rehabilitated Freeman Houses. ■ **Indirect**: Long-term beneficial impacts to public health and safety from added emergency relief infrastructure.

RESOURCE	PROPOSED ACTION		
	RBD PILOT PROJECT	FLOOD RISK REDUCTION	RESILIENCE CENTER
Open Space and Recreation	■ **Direct:** No significant direct adverse impacts. Long-term benefits from increased open space (stormwater facility). ■ **Indirect**: No indirect impact.	■ **Direct:** No significant direct adverse impacts. Temporary impacts may occur during construction including disruption to access to Seaside Park. In the long-term, changes to Seaside Park entrance would not adversely impact access. ■ **Indirect**: Long-term benefits to open space as elevating University Avenue would allow installation of future amenities.	■ **Direct:** No significant direct adverse impacts. Direct beneficial impact with construction of design element near entrance to Seaside Park. ■ **Indirect**: No indirect impact.
Air Quality and Greenhouse Gas Emissions	■ **Direct:** No long-term direct impacts. Temporary adverse impacts may occur during construction due to usage of construction equipment and construction related traffic. ■ **Indirect**: Impact from indirect increase in traffic from future development is not expected to have a potential to significantly affect the air quality in the vicinity.	■ **Direct:** No long-term direct impacts. Temporary adverse impacts may occur during construction due to usage of construction equipment and construction related traffic. ■ **Indirect**: Impact from indirect increase in traffic from future development is not expected to have a potential to significantly affect the air quality in the vicinity.	■ **Direct:** No direct impact. ■ **Indirect**: No indirect impact.

Source: WSP 2019

5.0 PROGRAMMATIC AGREEMENT

On October 22, 2019, the CT DOH, as the responsible entity designated by HUD, and the CT SHPO executed the Programmatic Agreement (PA) for the resolution of adverse effects to historic properties (see Attachment 2). The Mary and Eliza Freeman Center for History and Community, the City of Bridgeport, the Mohegan Tribe of Indians of Connecticut, the Delaware Tribe of Indians, and the Delaware Nation, Oklahoma were invited to be Concurring parties. The Resilient Bridgeport PA establishes stipulations for undertakings funded by the CDBG-NDR and CBDG-DR programs to take into account the effects of the undertakings on historic properties and archaeological resources.

The Resilient Bridgeport PA identifies five measures, as further detailed in the PA (see Attachment 2), to be implemented by CT DOH as a resolution of adverse effect:

1. Document current conditions of entrance to Seaside Park before any work commences
2. Update the National Register of Historic Places Nomination for Seaside Park
3. Prepare a comprehensive preservation and management plan for Seaside Park

4. Fund up to two National Register of Historic Places nominations focusing on historic landscapes or properties designed/influenced by the Olmsted landscape firms.

5. Replace all trees within Seaside Park disturbed/destroyed during construction, consistent with the preservation plan.

In addition, the Resilient Bridgeport PA includes procedures for project review and consultation for the design for the new entrance to Seaside Park, connection of the coastal flood defense system into CT DOT New Haven Line railroad viaduct, and rehabilitation of the Mary and Eliza Freeman Houses. Procedures for historic properties include review and comment of 60 percent and 90 percent design specifications by CT SHPO and Concurring parties, development of treatment plans or mitigation for any historic properties adversely affected by design enhancements and/or aesthetic treatments, and development of a Historic Resource Construction Protection Plan specific to the Freeman Houses that addresses vibrations during construction of the coastal flood defense system, if it occurs within 100 feet of the Houses. Procedures for archaeological resources include development of an Archaeological Assessment Plan for areas identified as archaeologically sensitive areas, an Archaeological Treatment Plan following assessment of data, and implementation of treatment plans if necessary. The Resilient Bridgeport PA also defines procedures for post-review discoveries. Concurring parties may review and comment on the Archaeological Treatment Plan and will be notified of any post-review discoveries at the earliest possible time.

A final draft version of the Resilient Bridgeport PA was included in Appendix C of the FEIS. The executed Resilient Bridgeport PA is included in this document as Attachment 2.

6.0 COMMENTS ON FINAL EIS

The Notice of Availability of the FEIS was published on September 6, 2019 with the comment period ending on October 7, 2019. Ten commenters provided comments:

1. Nicole Desrosiers, Duo Dickinson architect
2. Russel Bernard, 60 Main Street
3. George Estrada, University of Bridgeport
4. Jeraldlyn Mebane, Resident
5. James Crawford, Jr., Bridgeport Energy LLC
6. Todd Berman, The United Illuminating Company
7. John Brady, PSEG Power LLC
8. Maisa Tisdale, The Mary & Eliza Freeman Center for History and Community, Inc.
9. Timothy Timmermann, U.S. EPA Region 1
10. Linda Brunza, CTDEEP, Office of Planning and Program Development

A summary of comments and responses and copies of comments are included in Attachment 3. Some commenters had multiple comments and are addressed in multiple responses.

7.0 DECISION

The CT DOH has selected the Preferred Alternatives of the FEIS as the Selected Alternatives in this ROD for the implementation of the Proposed Action as the environmentally preferable alternatives as follows:

- **RBD Pilot Project.** The RBD Pilot Project at Marina Village/Windward Apartments will provide dry egress, reduce chronic flooding, improve water quality, provide a new public amenity, and anchor future development.

  The RBD Pilot Project will construct green and gray infrastructure improvements that reduce the flood risk to the Marina Village/Windward Apartments parcels during both acute and chronic flooding events (designed for the current 500-year base flood elevation plus 2.5 feet of sea level rise). The project will be designed to be both an infrastructure upgrade and urban amenity, composed of natural and fortified solutions to facilitate a more resilient neighborhood. The RBD Pilot Project consists of the following elements:

  - A new road, Johnson Street extension, raised to provide a dry evacuation route (dry egress) for the surrounding residents and facilitate emergency access during an acute flooding event
  - Regrading of a portion of the existing Johnson Street
  - Regrading of a portion of Columbia Street, north and south of the new Johnson Street Extension
  - A new 2.5-acre stormwater park, to be located just south of Johnson Street Extension with a wet well pump and force main connection into Cedar Creek outfall to accept water from upland streets and adjacent parcels and to retain, delay and improve the quality of the stormwater runoff
  - Additional street beautification and stormwater improvements along Ridge Avenue

- **Flood Risk Reduction Project.** The Flood Risk Reduction Project with the Preferred Alternative 1 alignment (see map in Attachment 1) of the coastal flood defense system that largely follows the Eastern alignment in the DEIS. The Flood Risk Reduction Project will reduce the flood risk within the study area from future coastal storm surge and chronic rainfall events.

  The Flood Risk Reduction Project includes a coastal flood defense system comprised of raising a portion of University Avenue and installing sheet piling and floodwalls along the Preferred Alternative 1 alignment (see map in Attachment 1). While all four of the alignment alternatives for the coastal flood defense system that were evaluated in the FEIS would meet the purpose and need, the Preferred Alternative 1 allows for the most comprehensive flood risk reduction to the South End, including both storm surge protection and stormwater drainage improvements and would remove the largest area from the 1% annual chance floodplain. The Preferred Alternative 1 alignment will minimize impacts to historic resources and the public realm. For this reason the Preferred Alternative 1 alignment is the Selected Alternative. Public access to Seaside Park on the south side of the coastal flood defense system would be maintained at all times via a ramped Broad Street open to vehicular traffic and pedestrians and ADA-accessible ramps for pedestrians and bicycles at the northern intersection of University

Avenue and Main Street. Main Street will be ramped and open to vehicular traffic on the south side of the intersection with University Avenue.

The Flood Risk Reduction Project will also include internal drainage improvements and green infrastructure elements to accommodate stormwater during coastal storm conditions and to reduce flooding from chronic rainfall events. These improvements include a pump station located on the south side of Henry Street, east of Main Street, to prevent stormwater flooding on the interior of the coastal flood defense system by collecting stormwater runoff and discharging via a proposed overland flow system through Seaside Park to Bridgeport Harbor (see map in Attachment 1). Other potential stormwater improvements could include upsizing pipes in regions where capacity of the system causes upland flooding, isolating stormwater systems to prevent backflow from outside of the coastal flood defense system alignment to the interior, and incorporating green infrastructure elements on public land.

The Flood Risk Reduction Project will be designed to meet the Federal Emergency Management Agency (FEMA) accreditation standard potentially allowing for a revision of the map of the 100-year floodplain to a Zone X or area protected by a levee. The revision would effectively take the area protected by the coastal flood defense system out of the floodplain.

- **Resilience Center.** The Resilience Center will serve as a center for resilience activities, provide a central location for resilience information dissemination, and assist the community in future recovery efforts. The project will provide funding to The Mary and Eliza Freeman Center to support renovations of a community space within the Freeman Houses complex that would provide a location in the South End that would operate as a community center, a central location for resilience information dissemination, and a location that could store supplies to assist the community with recovery efforts during or after storm events. The project would include another open-air site with green infrastructure improvements near the entrance to Seaside Park at University Avenue.

In addition to flood risk reduction and stormwater improvements, the Proposed Action will provide numerous co-benefits, including new recreational opportunities, water quality improvements, new and enhanced habitats, and aesthetic benefits. As noted above, the Selected Alternatives of the Proposed Action would lead to the fewest adverse impacts on the study area of the alternatives analyzed and were selected because they are the environmentally preferable alternatives. To further reduce anticipated adverse impacts, the CT DOH will implement extensive mitigation measures and Best Management Practices (BMPs), as described in the next section.

8.0 MITIGATION MEASURES TO AVOID OR MINIMIZE HARM

The Proposed Action will have potentially adverse impacts on multiple technical resource areas. Numerous mitigation measures and BMPs have been identified to reduce potential adverse impacts that could result from the Proposed Action. The mitigation measures and BMPs address impacts to the following resources: historic Seaside Park, archaeological resources, hazardous materials, natural resources, water quality in Cedar Creek Reach and Long Island Sound, the Connecticut Coastal Zone, infrastructure (sanitary sewer, utilities and transportation), and noise and air quality. The mitigation measures and BMPs described in Table 2 have been

adopted for the Resilient Bridgeport applicable projects and will implemented by, or under the direction of, CT DOH.

Table 2. Mitigation Measures and Best Management Practices to Avoid or Minimize Harm

Discipline	Mitigation Measures and Best Management Practices
RBD PILOT PROJECT	
Cultural Resources	■ The agreed upon mitigation and procedures for additional consultation has been memorialized in a Programmatic Agreement (PA) between CT DOH and CT SHPO (see Attachment 2). ■ Archaeological data recovery programs, comprising the removal of all or part of a site, would be appropriate in areas where significant archaeological sites will be impacted, if those areas are accessible and safe to excavate (i.e., not contaminated). All data recovery programs will be prepared in consultation with CT DOH, CT SHPO, and the Concurring parties in the PA.
Hazardous Materials	■ Completion of a follow-up Task 210: Subsurface Site Investigation (or equivalent Phase II sampling), as appropriate, that targets contaminants of concern in the soils based on historic use of the site, with limited grab groundwater samples if groundwater is encountered in the depth of disturbance ■ Development of site-specific plans/procedures (e.g., HASPs, SAMPs, etc.) ■ Implementation of carefully selected BMPs (e.g., use of dust control measures, use of stockpile liners, etc.) ■ Adherence to regulations regarding proper handling, management, storage, and transport of hazardous substances.
Noise and Vibration	■ Use of noise barriers along the edges of work zones. ■ Pre-trench the holes with a long-arm backhoe when work is close to tunnels, utilities, or other sensitive structures. ■ Include a Noise Specification and a Vibration Specification in the contractor's bid documents. ■ Require the contractor to develop a Noise and Vibration Control and Mitigation Plan based on proposed equipment and methods to document expected noise levels and noise control measures that would be implemented. ■ Perform noise and vibration monitoring during construction to ensure the contractor is complying with specified thresholds.
Natural Resources	■ Integrated pest management plans will be developed to address the potential for rats and other rodents that may be disturbed and mobilized by construction work. ■ In order to protect the threatened and endangered aquatic species in the vicinity of the study area (i.e., sea turtles and sturgeon), recommendations provided by EPA and NOAA Fisheries regarding harm mitigation measures, such as use of silt management and soil erosion best practices and disposal of contaminated sediment and sludge at a suitable upland facility, will be applied during any in-water work or during any activities that could affect water resources. ■ During the maintenance of existing outfalls, appropriate protective strategies, such as use of temporary erosion control fencing and storage of construction equipment away from the shoreline, will be implemented to preserve ecological communities (e.g., beach-dune complexes) potentially affected by proposed sewer system modifications. ■ Seasonal tree-cutting restrictions will be developed based on avian breeding seasons, and additional mitigation measures (e.g., restoring affected landscapes, replacing uprooted trees, and shielding undisturbed vegetation) near the project site will be implemented as necessary. ■ Protective measures will be taken to ensure that trees are safeguarded against adverse impacts associated with the construction process. ■ Possible hazards (e.g., heavy equipment, vehicles) will be stationed away from intact root systems. ■ Effectively mitigate any damage to existing trees that will occur as a result of construction activities.

Discipline	Mitigation Measures and Best Management Practices
Water Resources and Water Quality	■ Water from dewatering will be sampled and handled/disposed of appropriately, in accordance with state and federal requirements. ■ Impacts to water quality from soil erosion will be mitigated through existing regulatory programs and controls and by use of best management practices. ■ Captured stormwater runoff will be pretreated by a series of grassed swales and rain gardens prior to discharge. ■ During the installation of a StormTech Chamber, or other large-scale subterranean features, erosion and sediment control mitigation measures must be implemented during construction. These measures can include vegetation, temporary sediment barriers such as silt fences, hay bales, fabric-wrapped catch basin grates, and strategic stormwater management. The StormTech Chamber manufacturer recommends the application of pipe plugs on the inlet-pipe until the unit is ready for service. ■ Stormwater runoff during the construction resulting from the project will be managed in accordance with the CTDEEP Stormwater Management Regulations.
Coastal Zone Management	■ Debris clearing will be conducted from an upland access point (e.g., a manhole) to reduce littoral sediment disturbance. ■ Appropriate erosion control measures, including use of removable sediment barriers (e.g., silt fences, hay bales) and planting of stabilizing vegetation, will be applied during those construction activities of the Proposed Action that would require ground/soil disturbance (i.e., sewer pipe upsizing, force main installation, pump station construction) to sufficiently minimize expected impacts.
Infrastructure	■ Where the Proposed Action will cross or impact sewer lines or other utility lines, design accommodations will be implemented (for example hand excavations, use of jet grout seals or use of sleeves) to reduce impacts. ■ A traffic management plan will be developed in order to minimize impacts on existing traffic patterns. ■ Public outreach during construction will be implemented to notify the public of construction schedule, upcoming activities and potential impacts. As needed, construction project staff will reach out to local community groups to provide in-person updates on construction progress and potential impacts. ■ Variable Message Signs may be used throughout the project area to warn motorists, pedestrians, and cyclists of changes in traffic patterns including road closures.
Air Quality	■ **Dust Control** - To minimize fugitive dust emissions from construction activities, a fugitive dust control plan, including a robust watering program, will be required as part of contract specifications. ■ **Clean Fuel** – Ultra-low-sulfur-diesel fuel will be used exclusively for all diesel engines used during construction. ■ **Idling Restriction** - In addition to adhering to the local law restricting unnecessary idling on roadways, on-site vehicle idle time will be restricted to five minutes for all equipment and vehicles that are not using their engines to operate a loading, unloading, or processing device (e.g., concrete mixing trucks) or are otherwise required for the proper operation of the engine. ■ **Best Available Tailpipe Reduction Technologies** – Nonroad diesel engines with a power rating of 50 horsepower (hp) or greater and controlled truck fleets (i.e., truck fleets under long-term contract with the project), including but not limited to concrete mixing and pumping trucks, will utilize the best available tailpipe technology for reducing diesel particulate matter emissions. ■ **Utilization of Newer Equipment –** EPA's Tiers 1 through 4 standards for nonroad diesel engines regulate the emission of criteria pollutants from new engines, including particulate matter, CO, nitrogen oxides, and hydrocarbons. ■ **Diesel Equipment Reduction** – Electrically powered equipment will be preferred over diesel-powered and gasoline-powered versions of that equipment, to the extent practicable.

Discipline	Mitigation Measures and Best Management Practices
FLOOD RISK REDUCTION PROJECT	
Cultural Resources	■ The agreed upon mitigation and procedures for additional consultation has been memorialized in a Programmatic Agreement (PA) between CT DOH and CT SHPO (see Attachment 2). ■ Archaeological data recovery programs, comprising the removal of all or part of a site, would be appropriate in areas where significant archaeological sites will be impacted, if those areas are accessible and safe to excavate (i.e., not contaminated). All data recovery programs will be prepared in consultation with CT DOH, CTSHPO, and the Concurring parties in the PA.
Hazardous Materials	■ Completion of a follow-up Task 210: Subsurface Site Investigation (or equivalent Phase II sampling), as appropriate, that targets contaminants of concern in the soils based on historic use of the site, with limited grab groundwater samples if groundwater is encountered in the depth of disturbance ■ Development of site-specific plans/procedures (e.g., HASPs, SAMPs, etc.) ■ Implementation of carefully selected BMPs (e.g., use of dust control measures, use of stockpile liners, etc.) ■ Adherence to regulations regarding proper handling, management, storage, and transport of hazardous substances.
Noise and Vibration	■ Use of noise barriers along the edges of work zones. ■ Use of an alternative pile driving method such as hydraulic pile pushing system in specific locations. ■ Use of drilled caissons or slurry walls instead of piles in specific locations. ■ Wrap the pile with noise curtains or bellow that collapse as the pile is driven in specific locations. ■ Pre-trench the holes with a long-arm backhoe when work is close to tunnels, utilities, or other sensitive structures. ■ Develop a Historic Resource Construction Protection Plan specific to the Mary and Eliza Freeman Houses that addresses vibrations during construction, if construction of the coastal flood defense system falls within 100 feet of the Houses. ■ Include a Noise Specification and a Vibration Specification in the contractor's bid documents. ■ Require the contractor to develop a Noise and Vibration Control and Mitigation Plan based on proposed equipment and methods to document expected noise levels and noise control measures that would be implemented. ■ Perform noise and vibration monitoring during construction to ensure the contractor is complying with specified thresholds.
Natural Resources	■ Integrated pest management plans will be developed to address the potential for rats and other rodents that may be disturbed and mobilized by construction work. ■ In order to protect the threatened and endangered aquatic species in the vicinity of the study area (i.e., sea turtles and sturgeon), recommendations provided by EPA and NOAA Fisheries regarding harm mitigation measures, such as use of silt management and soil erosion best practices and disposal of contaminated sediment and sludge at a suitable upland facility, will be applied during any in-water work or during any activities that could affect water resources. ■ During the maintenance of existing outfalls, appropriate protective strategies, such as use of temporary erosion control fencing and storage of construction equipment away from the shoreline, will be implemented to preserve ecological communities (e.g., beach-dune complexes) potentially affected by proposed sewer system modifications. ■ Seasonal tree-cutting restrictions will be developed based on avian breeding seasons, and additional mitigation measures (e.g., restoring affected landscapes, replacing uprooted trees, and shielding undisturbed vegetation) near the project site will be implemented as necessary. ■ Protective measures will be taken to ensure that trees are safeguarded against adverse impacts associated with the construction process. ■ Possible hazards (e.g., heavy equipment, vehicles) stationed away from intact root systems. ■ Effectively mitigate any damage to existing trees occurring as a result of construction activities.

Discipline	Mitigation Measures and Best Management Practices
Water Resources and Water Quality	■ Water from dewatering will be sampled and handled/disposed of appropriately, in accordance with state and federal requirements. ■ Impacts to water quality from soil erosion will be mitigated through existing regulatory programs and controls and by use of best management practices. ■ Stormwater runoff during the construction resulting from the project will be managed in accordance with the CTDEEP Stormwater Management Regulations.
Coastal Zone Management	■ Debris clearing will be conducted from an upland access point (e.g., a manhole) to reduce littoral sediment disturbance. ■ Appropriate erosion control measures, including use of removable sediment barriers (e.g., silt fences, hay bales) and planting of stabilizing vegetation, will be applied during those construction activities of the Proposed Action that would require ground/soil disturbance (i.e., sewer pipe upsizing, pump station construction, flood wall construction, flood gate installation) to sufficiently minimize expected impacts.
Infrastructure	■ Where the Proposed Action will cross or impact sewer lines or other utility lines, design accommodations will be implemented (for example hand excavations, use of jet grout seals or use of sleeves) to reduce impacts. ■ Relocation of sewer and other utility lines will be considered only if other design solutions are impractical. ■ A traffic management plan will be developed in order to minimize impacts on existing traffic patterns. ■ Public outreach during construction will be implemented to notify the public of construction schedule, upcoming activities and potential impacts. As needed, construction project staff will reach out to local community groups to provide in-person updates on construction progress and potential impacts. ■ Variable Message Signs may be used throughout the project area to warn motorists, pedestrians, and cyclists of changes in traffic patterns including road closures.
Air Quality	■ **Dust Control** - To minimize fugitive dust emissions from construction activities, a fugitive dust control plan, including a robust watering program, will be required as part of contract specifications. ■ **Clean Fuel** – Ultra-low-sulfur-diesel fuel will be used exclusively for all diesel engines used during construction. ■ **Idling Restriction** - In addition to adhering to the local law restricting unnecessary idling on roadways, on-site vehicle idle time will be restricted to five minutes for all equipment and vehicles that are not using their engines to operate a loading, unloading, or processing device (e.g., concrete mixing trucks) or are otherwise required for the proper operation of the engine. ■ **Best Available Tailpipe Reduction Technologies** – Nonroad diesel engines with a power rating of 50 horsepower (hp) or greater and controlled truck fleets (i.e., truck fleets under long-term contract with the project), including, but not limited to concrete mixing and pumping trucks, will utilize the best available tailpipe technology for reducing diesel particulate matter emissions. ■ **Utilization of Newer Equipment –** EPA's Tiers 1 through 4 standards for nonroad diesel engines regulate the emission of criteria pollutants from new engines, including particulate matter, CO, nitrogen oxides, and hydrocarbons. ■ **Diesel Equipment Reduction** – Electrically powered equipment will be preferred over diesel-powered and gasoline-powered versions of that equipment, to the extent practicable.
■ RESILIENCE CENTER	
Cultural Resources	■ The agreed upon mitigation and procedures for additional consultation has been memorialized in a Programmatic Agreement between CT DOH and CT SHPO (see Attachment 2). ■ Archaeological data recovery programs, comprising the removal of all or part of a site, would be appropriate in areas where significant archaeological sites will be impacted, if those areas are accessible and safe to excavate (i.e., not contaminated). All data recovery programs will be prepared in consultation with CT DOH, CTSHPO, and the Concurring parties in the PA.

Discipline	Mitigation Measures and Best Management Practices
Hazardous Materials	■ Development of site-specific plans/procedures (e.g., HASPs, SAMPs, etc.) ■ Implementation of carefully selected BMPs (e.g., use of dust control measures, use of stockpile liners, etc.) ■ Adherence to regulations regarding proper handling, management, storage, and transport of hazardous substances.
Noise and Vibration	■ Use of noise barriers along the edges of work zones. ■ Pre-trench the holes with a long-arm backhoe when work is close to tunnels, utilities, or other sensitive structures. ■ Include a Noise Specification and a Vibration Specification in the contractor's bid documents. ■ Require the contractor to develop a Noise and Vibration Control and Mitigation Plan based on proposed equipment and methods to document expected noise levels and noise control measures that would be implemented. ■ Perform noise and vibration monitoring during construction to ensure the contractor is complying with specified thresholds.
Natural Resources	■ Integrated pest management plans will be developed to address the potential for rats and other rodents that may be disturbed and mobilized by construction work. ■ Seasonal tree-cutting restrictions will be developed based on avian breeding seasons, and additional mitigation measures (e.g., restoring affected landscapes, replacing uprooted trees, and shielding undisturbed vegetation) near the project site will be implemented as necessary. ■ Protective measures will be taken to ensure that trees are safeguarded against adverse impacts associated with the construction process. ■ Possible hazards (e.g., heavy equipment, vehicles) will be stationed away from intact root systems. ■ Effectively mitigate any damage to existing trees that will occur as a result of construction activities.
Water Resources and Water Quality	■ Water from dewatering will be sampled and handled/disposed of appropriately, in accordance with state and federal requirements. ■ Impacts to water quality from soil erosion will be mitigated through existing regulatory programs and controls and by use of best management practices. ■ Stormwater runoff during the construction resulting from the project will be managed in accordance with the CTDEEP Stormwater Management Regulations.
Coastal Zone Management	■ Appropriate erosion control measures, including use of removable sediment barriers (e.g., silt fences, hay bales) and planting of stabilizing vegetation, will be applied during those construction activities of the Proposed Acton that would require ground/soil disturbance to sufficiently minimize expected impacts.
Infrastructure	■ Where the Proposed Action will cross or impact sewer lines or other utility lines, design accommodations will be implemented (for example hand excavations, use of jet grout seals or use of sleeves) to reduce impacts. ■ A traffic management plan will be developed in order to minimize impacts on existing traffic patterns. ■ Public outreach during construction will be implemented to notify the public of construction schedule, upcoming activities and potential impacts. As needed, construction project staff will reach out to local community groups to provide in-person updates on construction progress and potential impacts. ■ Variable Message Signs may be used throughout the project area to warn motorists, pedestrians, and cyclists of changes in traffic patterns including road closures.

Discipline	Mitigation Measures and Best Management Practices
Air Quality	■ **Dust Control** - To minimize fugitive dust emissions from construction activities, a fugitive dust control plan, including a robust watering program, will be required as part of contract specifications. ■ **Clean Fuel** – Ultra-low-sulfur-diesel34 fuel will be used exclusively for all diesel engines used during construction. ■ **Idling Restriction** - In addition to adhering to the local law restricting unnecessary idling on roadways, on-site vehicle idle time will be restricted to five minutes for all equipment and vehicles that are not using their engines to operate a loading, unloading, or processing device (e.g., concrete mixing trucks) or are otherwise required for the proper operation of the engine. ■ **Best Available Tailpipe Reduction Technologies** – Nonroad diesel engines with a power rating of 50 horsepower (hp) or greater and controlled truck fleets (i.e., truck fleets under long-term contract with the project), including but not limited to concrete mixing and pumping trucks, will utilize the best available tailpipe technology for reducing diesel particulate matter emissions. ■ **Utilization of Newer Equipment** – EPA's Tiers 1 through 4 standards for nonroad diesel engines regulate the emission of criteria pollutants from new engines, including particulate matter, CO, nitrogen oxides, and hydrocarbons. ■ **Diesel Equipment Reduction** – Electrically powered equipment will be preferred over diesel-powered and gasoline-powered versions of that equipment, to the extent practicable.

9.0 MONITORING/ENFORCEMENT AND ONGOING COORDINATION

The commitments and conditions of approval stated in this ROD will be monitored by the appropriate Federal, State, and local agencies to ensure compliance. Agency and stakeholder coordination will continue during the design and permitting phases of the Proposed Action, and construction monitoring and enforcement programs will be implemented and included in contract documents to verify that construction contractors act in accordance with contract provisions and design plans, required permit conditions, and adopted environmental commitments and mitigation requirements.

During final design, the Project Team, overseen by CT DOH, will work with the stakeholders to finalize the design considerations and amenities to be incorporated into the Selected Alternatives of the Proposed Action components. This coordination will emphasize the usage of context-sensitive designs that will be mindful of the existing urban fabric to help mitigate any potential impacts of the project components on the community. During construction, the Proposed Action will also involve outreach and coordination by the Project Team with the community and impacted property owners to help mitigate construction-related impacts.

Coordination and communication with Federal, State, and local partners is critical in the implementation of the Selected Alternatives of the Proposed Action. The CT DOH intends to communicate the activities associated with the Selected Alternatives through participation at future Sandy Regional Infrastructure Resilience Coordination (SRIRC) Federal Review and Permitting (FRP) meetings, Citizen Advisory Committee and Technical Advisory Committee meetings. At these venues, the CT DOH will provide updates regarding the Proposed Action and will meet with relevant stakeholders, local authorities, regulators, and other interested parties as the Proposed Project moves forward.

Finally, in accordance with the CDBG-DR funding requirements, the CT DOH will develop an Operations and Maintenance (O&M) Plan for the Selected Alternatives of the Proposed Action. The CT DOH will establish an O&M subcommittee with local and State partners to develop this plan. State partners will be

engaged through the Governor's Council on Climate Change's State Agencies Fostering Resilience Council subcommittee established under Executive Order No. 3 on September 3, 2019 by Governor Lamont. The participants in the O&M planning and development process will include, but not be limited to, entities such as the CT DOH, the City of Bridgeport, the University of Bridgeport, PSEG, the Connecticut Department of Transportation (CT DOT) and the Connecticut Department of Energy and Environmental Protection (CT DEEP). The O&M Plan will contain five functions (Operations, Maintenance, Engineering, Training, and Administration) and describe the responsibilities, procedures, and communication associated with routine maintenance, flood event operations, and emergency maintenance/repairs.

10.0 APPROVAL

After carefully considering the purpose of and need for the Proposed Action; the analysis presented in the FEIS; the mitigation measures as required herein; the written and oral comments offered by Federal, State, and local agencies and entities and the public on the DEIS and FEIS; and the written responses to the comments, I have determined that the Preferred Alternative for the Proposed Action, as identified in the FEIS, best meets the project needs. Therefore, I have selected the Preferred Alternatives of the FEIS as the Selected Alternatives in this ROD (see Section 7.0) for implementation of the Proposed Action in accordance with 24 CFR 58 based on the following:

- The requirements of 24 CFR Part 58 have been met as the DEIS and FEIS were duly prepared under NEPA;
- The Selected Alternatives of the Proposed Action in this ROD (see Section 7.0) are the environmentally preferable alternatives because they avoid or minimize adverse environmental impacts to the maximum extent practicable and adverse environmental impacts will be further avoided or minimized by adopting those mitigation measures and BMPs identified herein;
- Alternative courses of action were evaluated and decisions were made in the best overall public interest based upon a balanced consideration of: the need to reduce chronic and acute flooding, while providing community co-benefits including resiliency education; the social, economic, and environmental impacts of the Proposed Action; and Federal, State, and local environmental protection goals;
- The Proposed Action's NEPA process, to the fullest extent possible, incorporates all environmental investigations, reviews, and consultations in a single coordinated process;
- Compliance with all applicable environmental requirements are reflected in the environmental review record required under NEPA; and
- Public involvement and a systematic interdisciplinary approach were essential parts of the development process for the Proposed Action.

Hermia Delaire

Sandy Program Manager & DOH Certifying Officer

Connecticut Department of Housing

10/24/2019
Date

ATTACHMENT 1: RESILIENT BRIDGEPORT PROJECT COMPONENT AREAS

Source: WSP 2019

ATTACHMENT 2: PROGRAMMATIC AGREEMENT

PROGRAMMATIC AGREEMENT AMONG
CONNECTICUT DEPARTMENT OF HOUSING, AND
CONNECTICUT STATE HISTORIC PRESERVATION OFFICE
REGARDING RESILIENT BRIDGEPORT IN BRIDGEPORT, CT

WHEREAS, the U.S. Department of Housing and Urban Development (hereinafter, HUD) has allocated supplemental Community Development Block Grant-Disaster Recovery funds (hereinafter, CDBG-DR) through the Rebuild by Design competition and Community Development Block Grant – National Disaster Resilience (hereinafter, CDBG-NDR) to the Connecticut Department of Housing (hereinafter, CT DOH) under the Disaster Relief Appropriations Act of 2013 (Pub. L. 113–2) and Federal Register Notices 79 FR 62182 and 81 FR 36557 for the purpose of assisting recovery in the most impacted and distressed areas declared a major disaster due to Hurricane Sandy;

WHEREAS, HUD has unique statutory authority to delegate its environmental compliance responsibilities promulgated at 24 CFR Part 58 to State, tribal, and local governments including obligations under Section 106 of the National Historic Preservation Act of 1966 (16 U.S.C. §§ 470 *et seq*, [54 U.S.C.306108], hereinafter, Act) and its implementing regulations 36 CFR Part 800;

WHEREAS, CT DOH has assumed the role of Responsible Entity, on behalf of HUD, and makes assistance, including CDBG-DR, available to communities, its citizens, Federally recognized Indian Tribes (Tribes) and other entities;

WHEREAS, CT DOH has determined that implementing the Resilient Bridgeport projects will result in undertakings (as that term is defined by 16 U.S.C. § 470w and 36 C.F.R. § 800.16(y)) that may affect historic properties listed in or eligible for the National Register of Historic Places (NRHP), and CT DOH has consulted with the Connecticut State Historic Preservation Office (CT SHPO) pursuant to Section 106 of the National Historic Preservation Act (NHPA), Pub. L. No. 89-665 (1966) (codified as amended at 16 U.S.C. § 470f) (Section 106) and Section 110(f) of the NHPA (codified as amended at 16 U.S.C. § 470h-2), and Section 106's implementing regulations at 36 C.F.R. Part 800;

WHEREAS, the Resilient Bridgeport undertakings is the set of projects to create a more resilient Bridgeport South End community, support its long-term viability, and improve health and safety for the community's vulnerable populations by lowering the risk of acute and chronic flooding, providing dry egress during emergencies, and educating the public about flood risks and sea level rise for this low-lying area located largely within the 1% annual chance floodplain, as further detailed in the Draft Environmental Impact Statement (hereinafter DEIS) published February 1, 2019 and the Final Environmental Impact Statement (hereinafter FEIS) published September 6, 2019 and in the descriptions below;

WHEREAS, the Resilient Bridgeport undertakings consist of three projects located within the South End of Bridgeport, Connecticut—the Rebuild By Design Pilot Project (hereinafter RBD Pilot Project), a Flood Risk Reduction Project on the east side of the South End (hereinafter Flood Risk Reduction Project), and a Resilience Center;

WHEREAS, RBD Pilot Project means the project benefiting the public housing development on the site of Marina Village/Windward Apartments consisting of the construction of the new

Johnson Street extension, raised to provide dry egress for the surrounding residents and facilitate emergency access during an acute flooding event; regrading of a portion of the existing Johnson Street; regrading of a portion of Columbia Street, north and south of the new Johnson Street Extension; additional street beautification and stormwater improvements along Ridge Avenue; and a new 2.5-acre stormwater park, to be located just south of Johnson Street Extension with a wet well pump and force main connection into Cedar Creek outfall to accept water from upland streets and adjacent parcels and to retain, delay and improve the quality of the stormwater runoff through this green and grey infrastructure approach (Exhibit A);

WHEREAS, Flood Risk Reduction Project means a combination of measures within the eastern South End that would reduce the flood risk within the DEIS study area, which includes the William Bishop Cottage Development Historic District and the Mary and Eliza Freeman Houses (Exhibit B), from future coastal surge, including 2.5 feet of sea level rise, and chronic rainfall events. The measures would include a coastal flood defense system and implementing both green and gray stormwater and internal drainage management strategies (e.g., detention/retention features, drainage structures, and pump systems);

WHEREAS, Coastal flood defense system means raising a portion of University Avenue and installing sheet piling and floodwalls in the north-south section of the coastal flood defense system alignment. The DEIS included a Western Alignment option and an Eastern Alignment option with variations in between those boundaries for the north-south section of the coastal flood defense system (Exhibit A) and in place of the Western and Eastern options the FEIS includes four alternative alignments, Alternatives 1-4, for the coastal flood defense system with Alternative 1 selected as the preferred alternative (Exhibit A);

WHEREAS, Resilience Center, as described in the FEIS, means a "center for resilience activities, disseminating information to the community and assisting the community in future recovery efforts. The Mary and Eliza Freeman Center for History and Community [(hereinafter, Freeman Center),] located on Main Street in the South End, is a significant historic resource to the local community. The project would provide funding to the Freeman Center to support renovations of a community space within the Mary and Eliza Freeman Houses complex that would provide a location in the South End that would operate as a community center, a central location for resilience information dissemination, and a location that could store supplies to assist the community with recovery efforts during or after storm events. The project would include another open-air site with green infrastructure improvements near the entrance to Seaside Park at University Avenue";

WHEREAS, pursuant to Section 106 regulations, CT DOH identified Archaeological and Historic Architectural Areas of Potential Effects (APE) for Resilient Bridgeport (Exhibit B), and determined that the APEs will be the areas where potential effects on Historic Properties caused by Projects may occur;

WHEREAS, the Historic Properties in the APE are listed under Exhibit C;

WHEREAS, the CT DOH is the Responsible Entity for initiating Section 106 and the CT SHPO is the regulatory agency overseeing compliance to Section 106 of the National Historic Preservation Act of 1966, as amended and which describes a finding of adverse effect when an undertaking may alter, directly or indirectly, any of the characteristics of a historic property that qualify the property for inclusion in the National Register in a manner that would diminish the integrity of the property's location, design, setting, materials, workmanship, feeling, or association;

WHEREAS, this Programmatic Agreement (hereinafter PA) was developed with appropriate public participation during the NEPA public comment periods pursuant to Subpart A of Section 106 Regulations, and copy of this PA was included in and distributed with the FEIS, published September 6, 2019. The public shall be duly notified as to the execution and effective dates of this PA through the issuance of the FEIS Record of Decision for the Resilient Bridgeport undertakings;

WHEREAS, in accordance with 36 CFR § 800.6(a)(1), in a letter dated July 26, 2019, the CT DOH notified the Advisory Council on Historic Preservation (hereinafter ACHP) of its intent to develop a PA for the Resilient Bridgeport undertakings; and on August 26, 2019 the ACHP declined to formally participate in the consultation to resolve adverse effects as the ACHP concluded under Appendix A, *Criteria for Council Involvement in Reviewing Individual Section 106 Cases* that their regulations do not apply to these undertakings as it appears that the CT SHPO are involved in productive consultation to resolve adverse effects;

WHEREAS, in the same letter as above dated August 26, 2019, the ACHP indicated they would like to provide technical assistance to the CT DOH in meeting its Section 106 obligations in accordance with 36 CFR Part 800.9(a) and requested that CT DOH schedule a meeting with the consulting parties to discuss the status of the current Section 106 review, and the schedule for drafting and finalizing a PA and that the meeting include consulting parties that have been identified to date, including the SHPO, tribes that may have properties of cultural and religious significance affected by the undertaking, representatives of local governments, and any other parties that may have concerns with the undertaking's effects on historic properties [36 C.F.R. §800.2 (c)(1-3,5) and in a letter dated August 28, 2019 CT DOH responded to the ACHP that the CT DOH would be inviting Concurring parties to review and sign the PA and notifying identified consulting parties of the publication of the PA ahead of its publication with the FEIS on September 6, 2019 and the commencement of the 30-day comment period and that the status and schedule of the Section 106 process is discussed in the FEIS along with the extensive public engagement process inclusive of the parties listed by the ACHP;

WHEREAS, the CT DOH issued letters on February 5, 2019 inviting the following parties to consult with the agency regarding the Resilient Bridgeport projects: the Freeman Center, the Barnum Museum, the Bridgeport History Center, Greater Bridgeport Community Enterprises, the Fairfield Garden Club, Chair of the Bridgeport Historic District No. 1 Commission, and the Associate Professor of English Eric Lehman of the University of Bridgeport and a letter on September 23, 2019 inviting the CT Trust for Historic Preservation to consult with the agency regarding the effects of the undertaking on historic properties and will continue to invite them to participate in the Section 106 process through invitations to general public meetings or invitations to focused meetings. In a letter dated February 20, 2019 the CT DOH invited the Golden Hill Paugussetts, a state-recognized tribe in Connecticut to be an interested party to the Section 106 process;

WHEREAS, the Freeman Center attended regular meetings of the Citizens Advisory Committee, submitted comments on the DEIS in an email dated March 18, 2019, presented oral comments on the DEIS at the Public Hearing on February 25, 2019, and met with CT DOH and CT SHPO on June 26, 2019;

WHEREAS, the Barnum Museum attended regular meetings of the Citizens Advisory Committee, submitted comments on the DEIS in a letter dated February 26, 2019, presented

oral comments on the DEIS at the Public Hearing on February 25, 2019, and participated in a conference call to review the draft PA with CT DOH on September 13, 2019;

WHEREAS, the Bridgeport History Center participated in a conference call with CT DOH on April 2, 2019 and in a letter dated September 9, 2019 was invited to review the draft PA;

WHEREAS, Greater Bridgeport Community Enterprises participated in a conference call with CT DOH on March 28, 2019 and in a letter dated September 9, 2019 was invited to review the draft PA;

WHEREAS, the Fairfield Garden Club responded in an email dated February 14, 2019 that they would like to participate as a consulting party. A member of the Fairfield Garden Club participated in a workshop at Seaside Park with CT DOH and CT SHPO on May 9, 2019 and three members of the Fairfield Garden Club participated in a conference call with CT DOH on September 23, 2019;

WHEREAS, the Chair of the Bridgeport Historic District No. 1 Commission responded in an email dated February 14, 2019 that the Commission's involvement should be limited due to legal requirements. The Chair of the Bridgeport Historic District No. 1 Commission participated in a conference call to review the draft PA with CT DOH on September 23, 2019;

WHEREAS, Associate Professor of English Eric Lehman of the University of Bridgeport participated in the Citizens Advisory Committee, participated in a workshop at Seaside Park with CT DOH and CT SHPO on May 9, 2019, and participated in a conference call to review the draft PA with CT DOH on September 13, 2019;

WHEREAS, the CT Trust for Historic Preservation responded in an email dated September 24, 2019 that they would like to participate as a consulting party. CT Trust for Historic Preservation submitted comments on the DEIS in a letter dated March 18, 2019, participated in a workshop at Seaside Park with CT DOH and CT SHPO on May 9, 2019, and participated in a conference call to review the draft PA with CT DOH on September 30, 2019;

WHEREAS, the Golden Hill Paugussetts did not respond to the invitation to be an interested party and did not respond to a letter issued on September 17, 2019 inviting them to review the draft PA;

WHEREAS, CT DOH has conducted reasonable and good faith efforts to invite the appropriate Native American tribes and groups (the "Tribes") to participate in the Section 106 process by way of identifying the Tribes and delivering letters of invitation to such Tribes that could attach religious or cultural significance to sites within the Resilient Bridgeport APE, and upon which Resilient Bridgeport could have an effect. Letters of invitation were sent as an attachment via email and a hard copy via mail to the Mashantucket (Western) Pequot Tribal Nation and the Mohegan Tribe of Indians of Connecticut on November 14, 2018, to the Delaware Tribe of Indians; the Delaware Nation, Oklahoma and the Narragansett Indian Tribe on December 21, 2018;

WHEREAS, the Mashantucket (Western) Pequot Tribal Nation did not respond to the above letter;

WHEREAS, the Mohegan Tribe of Indians of Connecticut responded to the above letter that they would like to be a consulting party on November 21, 2018 and submitted comments on the

Resilient Bridgeport projects in an email dated December 11, 2018 supporting recommendations for geotechnical investigations, monitoring of ground disturbances, and archaeological Phase IB surveying in areas determined to have high potential for intact resources;

WHEREAS, the Delaware Tribe of Indians responded to the above letter that they forwarded the information to their archaeologist, Susan Bachor who handles reviews for all projects in their eastern states on December 27, 2018;

WHEREAS, the Delaware Nation, Oklahoma responded to the above letter on January 28, 2019 that the Resilient Bridgeport Undertakings do not endanger cultural or religious sites of interest to the Delaware Nation but they should be notified within 24 hours if an archaeological site or artifacts are inadvertently uncovered;

WHEREAS, the Narragansett Indian Tribe did not respond to the above letter;

WHEREAS, the CT DOH in a letter dated September 5, 2019, invited the Tribes who responded to the consulting parties invitation to be Concurring parties on the PA: the Mohegan Tribe of Indians, the Delaware Tribe of Indians and the Delaware Nation and in a letter dated September 5, 2019 invited the Freeman Center and the City of Bridgeport to be Concurring parties on the PA;

WHEREAS, the CT DOH sent an email on September 27, 2019 inviting the consulting parties and the interested party and sent an email on September 30, 2019 inviting the Concurring parties, to a meeting on October 8, 2019 to review revisions to the draft PA following the close of the 30-day public review period;

WHEREAS, the City of Bridgeport met with the CT DOH to review the draft PA on September 6, 2019 and CT DOH presented to the Bridgeport Board of Parks Commissioners at their regularly scheduled meeting on October 8, 2019, wherein the board subsequently approved a resolution supporting the overall Resilient Bridgeport project and the City of Bridgeport being a Concurring party to the PA.

WHEREAS, the City of Bridgeport will bring the resolution to the City Council for their approval at their regularly scheduled meeting on November 4, 2019 and will sign as a Concurring party pending the approval of the resolution at that meeting;

WHEREAS, in a meeting on October 9, 2019 the CT DOH and the CT SHPO reviewed the project schedule and due to schedule constraints planned to execute the PA prior to November 4, 2019, but agreed to accept the signature of the City of Bridgeport as a Concurring party on the executed PA after November 4, 2019 pending the outcome of the City Council resolution;

WHEREAS, in a meeting on October 9, 2019 the CT DOH and CT SHPO determined the City of Bridgeport Concurring party signature page will remain attached to the PA once it is executed. The CT DOH and CT SHPO determined that if and when the City of Bridgeport has agreed to be a Concurring party with their signature, the executed PA will be posted on the CT DOH website with the signed City of Bridgeport Concurring party signature page;

WHEREAS, the DEIS was published on February 1, 2019 for public comment. The DEIS provides the environmental impact analysis of the Resilient Bridgeport projects;

WHEREAS, CT DOH has coordinated compliance with Section 106 and NEPA, pursuant to 36 CFR § 800.8, through the preparation of a Historic and Archaeological Resources Evaluation Report submitted to CT SHPO in May 2018 and developed cultural resource specific recommendations for inclusion within the Project's FEIS for Resilient Bridgeport so that Section 106 recommendations were considered during the analysis of alternatives as part of the NEPA EIS processes as well as consultation with CT SHPO for participation in the Section 106 process;

WHEREAS, in a letter dated March 18, 2019, CT SHPO determined the RBD Pilot Project will have no adverse effects to historic properties, and therefore no additional consultation regarding RBD Pilot Project is needed;

WHEREAS, in the same letter, CT SHPO determined an adverse effect to the historic Seaside Park for the Flood Risk Reduction Project - listed in the National Register under Criteria B and C as a "well-preserved Post-Civil War park landscape" and "an important work of 19th-century civil engineering"- due to the proposed elevation of University Avenue at the entrance to the park, which alters the remaining portion of the park designed by the firm of Frederick Law Olmsted;

WHEREAS, in the same letter, the option of the alignment of the coastal flood defense system" of the Flood Risk Reduction Project along Main Street across the street from the William Bishop Cottage Development Historic District - listed under Criteria B and C as "one of Bridgeport's fine extensive tract developments, a community planned especially to provide an innovative housing scheme for lower-income workers"- could adversely affect the setting, feeling and association of the Cottage District;

WHEREAS, the coastal flood defense system of the Flood Risk Reduction Project is proposed to terminate at the Connecticut Department of Transportation (hereinafter CT DOT) New Haven Line railroad viaduct, and in the letter dated March 18, 2019, CT SHPO determined it is potentially eligible for listing on the National Register under Criteria A and C, and includes numerous structures and features, including railroad viaduct retaining walls, catenary structures, and bridges at Park and Myrtle Avenues and Warren, Lafayette, and Broad Streets, as well as the under-grade railroad bridge (known as Bridge 43.21), located at 600 Main Street;

WHEREAS, in the letter dated March 18, 2019, CT SHPO determined the creation of a Resilience Center would directly affect the Mary and Eliza Freeman Houses, listed under Criterion A "as the last two houses to survive of "Little Liberia," a settlement of black freedmen in this area that began in [1821] and reached its apogee just prior to the outbreak of the Civil War;"

WHEREAS, in the letter dated March 18, 2019, CT SHPO stated that more information is needed to evaluate the effect to both Seaside Park and the Freeman Houses, including design schema;

WHEREAS, in a letter dated October 7, 2019, the Freeman Center stated that the Resilience Center is consistent with the mission and strategic priorities of the Mary and Eliza Freeman Center for History and requested the opportunity for additional consultation in the design process in collaboration with CT DOH;

WHEREAS, in a meeting on October 8, 2019 the CT DOH agreed to consult with the Freeman Center and CT SHPO to further refine the design of the Resilience Center prior to construction, including the potential to create an agreement separate from this document;

WHEREAS, the entire APE is likely sensitive for Late Woodland and Contact period archaeological sites, including burial and village remnants;

WHEREAS, the preferred alternative for the alignment of the coastal flood defense system of the Flood Risk Reduction Project, known as Alternative 1 (Exhibit A), is proposed to continue the 60 Main Street alignment parallel to the shoreline across the 60 Main Street site to the eastern border, where it would turn south for a short distance before crossing to the east into PSEG's property and connecting to the elevated podium for PSEG's newly built Harbor Unit 5 (HU5) perimeter sheet pile wall. HU5 would provide the southeast corner of the coastal flood defense system, which would extend north from HU5's access road ramp on the northwest corner of the perimeter wall. The alignment would connect from the ramp over to Bridgeport Energy's eastern border north of Atlantic Street. The alignment would continue along the eastern border of Bridgeport Energy's site until it reaches the Pequonnock Substation relocation site, where it would continue north along the eastern property line of the site across Ferry Access Road with a northern tie-in at the elevated CT DOT New Haven Line railroad viaduct;

WHEREAS, Alternative 1 in the FEIS is CT SHPO's preferred option for the alignment of the coastal flood defense system and would not adversely impact the William Bishop Cottage Development Historic District;

WHEREAS, there is a potential for adverse effects to historic resources in regards to the Mary and Eliza Freeman Houses regarding vibrations during construction of the coastal flood defense system, and additional information regarding design of the coastal flood defense system where it is proposed to be integrated into the railroad viaduct, and an archaeological assessment plan for the APE;

WHEREAS, in a letter dated October 7, 2019, the Freeman Center concurred with CT SHPO's opinion that there is the potential for adverse effects to the Mary and Eliza Freeman Houses regarding vibrations during construction of the coastal flood defense system;

WHEREAS in the meeting on October 8, 2019 CT DOH and CT SHPO responded that the Freeman Center as a Concurring party will be given a 30 calendar day review and comment period on the Historic Resource Construction Protection Plan;

WHEREAS, it was determined by the CT DOH as the Responsible Entity that a PA was appropriate to the circumstances of the above projects since as design progresses to 90% there may be changes that would avoid, minimize, or mitigate any findings of adverse effect; CT SHPO expects additional consultation in accordance with Section 106 during that design process; a PA allows for the agreement of CT DOH and CT SHPO to the process by which further consultation will occur throughout the design process; and that publication of the PA with the FEIS allows for public review of that consultation process;

WHEREAS, it is possible that as the Resilient Bridgeport undertakings evolve or as a result of the addition of new project elements beyond the boundaries of the current APEs, CT DOH, in consultation with CT SHPO, may identify additional, previously unidentified Historic Properties or archaeologically sensitive areas, which may be affected by the Project;

WHEREAS, CT DOH invited the City of Bridgeport, the Freeman Center, and the Tribes who responded to the invitation to be a consulting party (the Mohegan Tribe of Indians of Connecticut, Delaware Tribe of Indians, and the Delaware Nation, Oklahoma) to sign this

Programmatic Agreement as Concurring parties in a letter dated September 5, 2019 in advance of the start of the 30-day comment period of the FEIS on September 6, 2019;

NOW, THEREFORE, CT DOH and CT SHPO as the PA Signatories, agree that, upon execution of this PA, the Resilient Bridgeport undertakings funded by the CDBG-NDR and CDBG-DR programs shall be implemented in accordance with the following stipulations to take into account the effects of the undertaking on Historic Properties and Archaeological Resources.

STIPULATIONS

CT DOH will ensure the following stipulations are implemented:

I. RESOLUTION OF ADVERSE EFFECT

1. CT DOH, or a contracted party, shall document the current conditions of entrance to be lost to Seaside Park before any work commences. Documentation shall meet the state-level standards of CT SHPO and, at a minimum, include indexed high-quality photographs, a site plan, and narrative text. Final documentation shall be provided to CT SHPO for permanent archiving and public accessibility, including electronically on the City of Bridgeport's website. A copy is also to be made available to the Bridgeport History Center at the Bridgeport Public Library. Documentation is estimated to cost $20,000.

2. The National Register of Historic Places Nomination for Seaside Park shall be updated, with funding by CT DOH, following the completion of the undertaking. The update shall reflect current conditions but also provide additional narrative that meets current documentation standards in consultation with CT SHPO. The consultant selected to update the district must meet the minimum professional qualifications for architectural historian, as outlined in the Secretary of the Interior's Historic Preservation Professional Qualification Standards and Guidelines, part of the larger Secretary of the Interior's Standards and Guidance for Archeology and Historic Preservation. The updated nomination shall include a reevaluation of:
    a. Boundaries,
    b. Contributing and non-contributing resources, and
    c. Themes and period of significance.

    A final draft that is acceptable to SHPO will be completed within one (1) year of the signing of this document. Additional guidance will be provided by CT SHPO after the project has begun. Updating the nomination is estimated to cost $20,000.

3. CT DOH shall fund a comprehensive preservation and management plan for Seaside Park developed in consultation with CT SHPO, with specific attention made to the following:
    a. Remaining 19th century engineering components and water management systems. The consultant selected to create this portion of the plan must meet the minimum professional qualifications for architectural historian, as outlined in the Secretary of the Interior's Historic Preservation Professional Qualification Standards and Guidelines, part of the larger

Secretary of the Interior's Standards and Guidance for Archeology and Historic Preservation.

b. Structures and features determined to be significant within the nomination and not in direct APE, including Bath House, Stables, Memorial Archway, and Lighthouse and keeper's house foundations. The consultant selected to create this portion of the plan must meet the minimum professional qualifications for architectural historian, as outlined in the Secretary of the Interior's Historic Preservation Professional Qualification Standards and Guidelines, part of the larger Secretary of the Interior's Standards and Guidance for Archeology and Historic Preservation.
c. A tree study and planting diagram created by a licensed arborist, having prior experience with historic landscapes. The resulting portion of the plan is to include a financial allowance of $50,000 for maintenance and planting schema that includes reestablishment of historic tree canopy.
d. Opportunities for natural flood remediation and addressing sea level rise shall be incorporated into the plan, including opportunities for reintroducing permeable paths and surfaces.

A final draft that is acceptable to SHPO will be completed within one (1) year of the signing of this document. Additional guidance will be provided by CT SHPO after the project has begun.

The comprehensive preservation and maintenance plan is estimated to cost $100,000, with an implementation fund of $100,000. The total estimate for measures in Stipulation I.3 is $250,000.

4. CT DOH shall fund up to two National Register of Historic Places nominations focusing on historic landscapes or properties designed/influenced by the Olmsted landscape firms. Suitable resources are to be determined by September 30, 2020, in consultation with and approved by CT SHPO.

   The two nominations are estimated to cost $20,000 each.

5. All trees within Seaside Park disturbed/destroyed during construction shall be replaced in a location that will support tree growth. The replacement species and location shall be in accordance with the new planting schema prepared in item 3c above.

   Cost of tree replacement is to be determined once site plans have been finalized and will be incorporated into construction costs.

Should the CT DOH determine that the costs of carrying out the mitigation measures in Stipulation I.1 to I.4 may exceed $379,500 in CDBG-NDR funds, which includes a 15 percent contingency, then the CT DOH shall consult with the CT SHPO to consider and if possible adopt ways of limiting costs, subject to Stipulation VI. The cost of tree replacement in Stipulation I.5 is on a per tree basis depending on final design and construction impacts and is not included in the above budget.

II. PROJECT REVIEW AND CONSULTATION

CT DOH shall ensure that the procedures for project-specific consultation, including design for the new entrance to Seaside Park, connection of the coastal flood defense system into CT DOT New Haven Line railroad viaduct, and funds for the support of renovations of a community space within the Mary and Eliza Freeman Houses complex to serve as a Resilience Center, historic properties and archaeological resources identification and evaluation, assessment of effects, and mitigation of adverse effects are implemented in accordance with the procedures below.

A. Procedures for Project Review: Historic Properties
   1. Design Specifications will be submitted by the CT DOH to the CT SHPO and Concurring parties for review and comment. The CT SHPO and Concurring parties will be afforded a 30 calendar day review period for all design submittals. CT DOH may proceed with the design if CT SHPO or Concurring parties do not respond within the time allotted or if a response is provided by CT SHPO and the Concurring parties sooner.
      a. When design reaches 60 percent, CT SHPO and Concurring parties will review all available plans and specifications and determine if the design might affect historic properties within the APE.
      b. When design reaches 90 percent, CT SHPO and Concurring parties will review all available plans and specifications and determine if the design might affect historic properties within the APE.

   2. All design enhancements and/or aesthetic treatments that may affect historic properties will be subject to a 30 calendar day review and comment period by the CT SHPO and Concurring parties.
      a. In the event CT SHPO determines that the design enhancements and/or aesthetic treatments will have an adverse effect on the historic property, CT DOH shall develop appropriate treatment plans or mitigation for historic properties adversely affected by the projects. Unless the CT SHPO objects within 30 calendar days of receipt of any plan, CT DOH shall ensure that treatment plans are implemented by CT DOH or its representative(s).
      b. Each treatment plan will address historic properties adversely affected and set forth means to avoid, protect, or develop treatment measures to minimize the undertakings' effects where CT DOH, in consultation with the appropriate agencies and CT SHPO determines that adverse effects cannot be avoided. The treatment plans will conform to the principles of the ACHP's Treatment of Archaeological Properties: A Handbook Parts I and II, the "Secretary of the Interior's Standards and Guidelines for Archaeology and Historic Preservation" (48 Fed. Reg. 44716-44742 (September 29, 1983)), and appropriate CT SHPO Guidelines.
      c. CT DOH, shall revise Plans to address comments and recommendations provided by the CT SHPO and Concurring parties.

   3. Should construction of the coastal flood defense system fall within 100 feet of the Mary and Eliza Freeman Houses, CT DOH will develop a

Historic Resource Construction Protection Plan specific to the Mary and Eliza Freeman Houses that addresses vibrations during construction. The plan is intended to ascertain the current condition of the buildings, to identify potential impact to the buildings due to construction activities, and to develop protection and/or monitoring procedures during construction for the buildings. The Plan will be submitted to CT SHPO and the Freeman Center for a review and comment period of 30 calendar days from submittal of design review to CT SHPO and the Freeman Center. CT DOH may proceed with the plan if CT SHPO and the Freeman Center do not respond within the time allotted or if a response is provided by CT SHPO or the Freeman Center sooner.

4. CT DOH will include all plans within specific contract packages to inform contractors of the responsibilities relative to historic properties within the APE.

B. Procedures for Project Review: Archaeological Resources

1. CT DOH, in consultation with the CT SHPO and in advance of construction, will develop an Archaeological Assessment Plan for areas identified as archaeologically sensitive areas within the Project's archaeological APE.
    a. The plan may include Ground Penetrating Radar (GPR) to provide evidence of potential burial sites and Geoprobes to provide data on subsurface archaeological integrity.
    b. The results of the GPR or Geoprobes will be used to further refine the areas of archaeological potential.
    c. The Archaeological Assessment Plan shall be submitted to CT SHPO for a review and comment period of 30 calendar days, which may include implementation of an archaeological monitor where deemed appropriate.
    d. Upon receipt of comments on the Plan, CT DOH will implement the approved Plan. CT DOH may proceed with the plan if CT SHPO does not respond within the time allotted or if a response is provided by CT SHPO sooner.
    e. CT DOH will provide a summary report of the Archaeological Assessment Plan's activities and results.

2. Following the refinement and definition of sensitive areas, shovel test sites and excavation units in select parts of the APE that may be impacted will be performed to confirm further the presence or absence of probable archaeological deposits.

3. Following assessment of archaeological data, recommendations for additional intensive archaeological survey, potential archaeological removal of identified sites, and exploration of burials will be made and an Archaeological Treatment Plan will be developed by the CT DOH and submitted to CT SHPO and Concurring parties for a review and comment period of 30 calendar days.

a. If deemed appropriate by the CT SHPO, the Archaeological Treatment Plan may be incorporated into a Memorandum of Agreement with the appropriate parties
b. Upon receipt of comments on the Archaeological Treatment Plan, CT DOH will implement the approved Plan. For all field tested sites, CT DOH shall provide a summary report to the CT SHPO and Concurring parties for a 30 calendar day review period. CT DOH may implement the plan if CT SHPO and Concurring parties do not respond within the 30 calendar days or if a response is provided sooner.

4. If the Projects will have an adverse effect on an NRHP eligible archaeological site, CT DOH in consultation with CT SHPO, shall develop appropriate treatment plans for archaeological properties adversely affected by the undertakings. Unless the CT SHPO objects within 30 calendar days of receipt of any plan, CT DOH shall ensure that treatment plans are implemented by CT DOH or its representative(s). CT DOH shall revise plans to address comment and recommendations provided by CT SHPO. CT DOH may proceed with the plans if CT SHPO does not respond within the time allotted or if a response is provided by CT SHPO sooner.

5. Confidentiality
   a. All parties to this PA shall ensure that shared data, including data concerning the precise location and nature of historic properties and properties of religious and cultural significance are protected from public disclosure to the greatest extent permitted by law, consistent with applicable confidentiality requirements and federal records management requirements, including conformance to Section 304 of the NHPA, as amended, and the regulations implementing the NHPA, specifically 36 CFR § 800.11 (c) and Section 9 of the Archaeological Resource Protection Act as amended 1988 (ARPA) and Executive Order on Sacred Sites 13007 FR dated May 24, 1996.

C. Procedures for Post-Review Discoveries

1. CT DOH shall ensure that the procedures for post-review discoveries, if previously unidentified historic properties are discovered or unanticipated effects on historic properties are found during the implementation of the undertaking, are implemented in accordance with the procedures outlined below.

2. If previously unidentified historic properties are discovered or unanticipated effects on historic properties are found during the implementation of the undertaking, CT DOH shall cease all work in the vicinity of the discovered historic property or effect and take all reasonable measures to avoid or minimize harm to the property until it can be evaluated pursuant to Stipulation II of this Programmatic Agreement.

3. CT DOH shall notify the PA Signatories and the Concurring parties of the discovery at the earliest possible time and consult to develop actions to take into account the effects of the Undertaking. CT DOH shall notify the PA Signatories of any time constraints, and all parties will mutually agree upon timeframes for this consultation.

4. CT DOH shall provide the CT SHPO with written notification describing CT DOH's assessment of National Register eligibility of the property and proposed actions to resolve the adverse effects.

5. The CT SHPO shall respond to CT DOH's written notification within the mutually agreed upon timeframe.

6. CT DOH shall take into account their recommendations regarding National Register eligibility and proposed actions, and then carry out appropriate actions.

7. Memorandum of Agreement (MOA) will be developed by the CT DOH if CT DOH determines, in consultation with CT SHPO and the Concurring parties, that the Undertaking will have an adverse effect on the unanticipated discovery. The MOA will include avoidance, minimization, and/or mitigation measures for eligible properties. CT DOH will notify the ACHP of any finding of adverse effect and invite the ACHP to participate in the development of the MOA pursuant to 36 CFR § 800.6(a)(1)(i)(c)

8. The agency official shall provide the CT SHPO a report of the actions when they are completed.

9. Human Remains
   a. If human remains are discovered during construction activities, all construction will cease within one hundred (100) feet in all directions of the human remains. CT DOH will immediately inform the appropriate parties as laid out under Connecticut General Statutes Section 10-388.

   b. Any human remains and funerary objects discovered as a part of the Projects will be treated by CT DOH in accordance with the requirements of Connecticut General Statutes Section 10-388.

III. QUALIFICATIONS

All cultural resource work under this agreement will be conducted by qualified professionals meeting the *Secretary of the Interior's Guidelines for Archaeology and Historic Preservation* (48 FR 44738-39).

IV. REPORTING AND MONITORING

A. Annual Reports. In order to monitor completion of the stipulations contained in this PA, CT DOH, will prepare and submit an annual report each year for distribution to the CT SHPO summarizing the actions taken to fulfill the stipulations of this PA. The CT

DOH and CT SHPO as the Signatories may agree to change the frequency of the reports.

B. Reporting Meetings. CT DOH will coordinate meetings with the CT SHPO to discuss activities carried out pursuant to this PA as needed.

C. Schedule. The timeframe for the annual reports will commence from the execution date of this PA.

V. OTHER FEDERAL INVOLVEMENT

In the event that another federal agency not initially a party to or subject to this PA receives an application for funding/license/permit for the Undertaking as described in this PA, that agency may fulfill its Section 106 responsibilities by stating in writing it concurs with the terms of this PA and notifying the CT DOH and CT SHPO that it intends to do so. Such agreement shall be evidenced by execution of this PA and filing with the ACHP, and implementation of the terms of this PA.

VI. DISPUTE RESOLUTION

Should the CT DOH or the CT SHPO as the Signatories to this PA object in writing within 15 calendar days to the terms of this Agreement, CT DOH shall consult with CT SHPO for not more than 15 calendar days to resolve the objection. If CT DOH determines within 15 calendar days that such objection cannot be resolved, CT DOH will:

A. Forward all documentation relevant to the dispute, including the CT DOH's proposed resolution, to the ACHP. The ACHP shall provide CT DOH with its advice on the resolution of the objection within 30 calendar days of receiving adequate documentation. Prior to reaching a final decision on the dispute, CT DOH shall prepare a written response that takes into account any timely advice or comments regarding the dispute from the ACHP and CT SHPO and provide ACHP and CT SHPO with a copy of this written response. CT DOH will then proceed according to its final decision.

B. If the ACHP does not provide its advice regarding the dispute within the 30 calendar day time period, CT DOH may make a final decision on the dispute and proceed accordingly. Prior to reaching such a final decision, CT DOH shall prepare a written response that takes into account any timely comments regarding the dispute from the CT SHPO, and provide CT SHPO and the ACHP with a copy of such written response.

C. CT DOH's responsibility to carry out all other actions subject to the terms of this PA that are not the subject of the dispute remain unchanged.

VII. AMENDMENTS

This PA may be amended when such an amendment is agreed to in writing by CT DOH and CT SHPO as the Signatories. The amendment will be effective on the date a copy signed by the CT DOH and CT SHPO as Signatories is filed with the ACHP.

VIII. EMERGENCY SITUATION

In accordance with 36 CFR Section 800.12(b)(2), should an emergency situation occur which represents an imminent threat to public health, or safety, or results from a natural disaster, or safety CT DOH shall immediately notify the CT SHPO as the Signatory, the ACHP, the appropriate SHPO/THPO and any Indian tribe or Native Hawaiian organization that may attach religious and cultural significance to historic properties likely to be affected prior to the undertaking of the condition which has initiated the situation and the measures taken to respond to the emergency or hazardous condition. The CT DOH will afford them an opportunity to comment within 7 calendar days of notification. If the CT DOH determines that circumstances do not permit 7 calendar days for comment, the CT DOH shall notify the ACHP, the SHPO/THPO and the Indian tribe or Native Hawaiian organization and invite any comments within the time available. Should the CT SHPO or the ACHP desire to provide technical assistance to the CT DOH, they shall submit comments within 7 calendar days from notification, if the nature of the emergency or hazardous condition allows for such coordination. In accordance with 36 CFR Section 800.12(d) Stipulation VIII applies only to undertakings that will be implemented within 30 calendar days after the disaster or emergency has been formally declared by the appropriate authority. An agency may request an extension of the period of applicability from the ACHP prior to the expiration of the 30 calendar days. Immediate rescue and salvage operations conducted to preserve life or property are exempt from the provisions of section 106 and 36 CFR Section 800.12(d).

IX. TERMINATION

If the CT DOH or CT SHPO as the Signatories determines that its terms will not or cannot be carried out, that party shall immediately consult with the other party to attempt to develop an amendment per Stipulation VII, above. If within 15 calendar days an amendment cannot be reached, the CT DOH or CT SHPO as the Signatories may terminate the PA upon written notification to the Signatories and Concurring parties.

Once the PA is terminated, and prior to work continuing on the undertaking, CT DOH must either (a) execute a PA pursuant to 36 CFR § 800.6 or (b) request, take into account, and respond to the comments of the ACHP under 36 CFR § 800.7. CT DOH shall notify the CT SHPO as to the course of action it will pursue.

X. DURATION

Unless otherwise extended and agreed upon by the CT DOH and CT SHPO as the Signatories to this PA, the Resilient Bridgeport PA will remain in effect until December 31, 2022, with all funds expended by September 30, 2022 consistent with the Disaster Relief Act of 2013 (P.L. 113-2) and 31 U.S.C. § 1552(a).

APPROVAL AND SIGNATURE PAGE FOR PROGRAMMATIC AGREEMENT

AMONG

CONNECTICUT DEPARTMENT OF HOUSING

AND

CONNECTICUT STATE HISTORIC PRESERVATION OFFICE

REGARDING RESILIENT BRIDGEPORT IN BRIDGEPORT, CT

SIGNATORY

THE CONNECTICUT DEPARTMENT OF HOUSING

By: _____

Date 10/17/19

Name: Seila Mosquera-Bruno

Title: Commissioner

APPROVAL AND SIGNATURE PAGE FOR PROGRAMMATIC AGREEMENT

AMONG

CONNECTICUT DEPARTMENT OF HOUSING

AND

CONNECTICUT STATE HISTORIC PRESERVATION OFFICE

REGARDING RESILIENT BRIDGEPORT IN BRIDGEPORT, CT

SIGNATORY

THE CONNECTICUT STATE HISTORIC PRESERVATION OFFICE

By: Mary B. Dunne

Date 10.22.19

Name: MARY DUNNE

Title: STATE HISTORIC Preservation Officer

CONCURRING PARTIES PAGE FOR PROGRAMMATIC AGREEMENT

AMONG

CONNECTICUT DEPARTMENT OF HOUSING

AND

CONNECTICUT STATE HISTORIC PRESERVATION OFFICE

REGARDING RESILIENT BRIDGEPORT IN BRIDGEPORT, CT

CONCURRING PARTY

MOHEGAN TRIBE OF INDIANS OF CONNECTICUT

By:_____

Date_____

Name:

Title:

CONCURRING PARTIES PAGE FOR PROGRAMMATIC AGREEMENT

AMONG

CONNECTICUT DEPARTMENT OF HOUSING

AND

CONNECTICUT STATE HISTORIC PRESERVATION OFFICE

REGARDING RESILIENT BRIDGEPORT IN BRIDGEPORT, CT

CONCURRING PARTY

DELAWARE TRIBE OF INDIANS

By:_____

Date_____

Name:

Title:

CONCURRING PARTIES PAGE FOR PROGRAMMATIC AGREEMENT

AMONG

CONNECTICUT DEPARTMENT OF HOUSING

AND

CONNECTICUT STATE HISTORIC PRESERVATION OFFICE

REGARDING RESILIENT BRIDGEPORT IN BRIDGEPORT, CT

CONCURRING PARTY

DELAWARE NATION, OKLAHOMA

By:_____

Date_____

Name:

Title:

CONCURRING PARTIES PAGE FOR PROGRAMMATIC AGREEMENT

AMONG

CONNECTICUT DEPARTMENT OF HOUSING

AND

CONNECTICUT STATE HISTORIC PRESERVATION OFFICE

REGARDING RESILIENT BRIDGEPORT IN BRIDGEPORT, CT

CONCURRING PARTY

CITY OF BRIDGEPORT

By:_____

Date_____

Name:

Title:

CONCURRING PARTIES PAGE FOR PROGRAMMATIC AGREEMENT

AMONG

CONNECTICUT DEPARTMENT OF HOUSING

AND

CONNECTICUT STATE HISTORIC PRESERVATION OFFICE

REGARDING RESILIENT BRIDGEPORT IN BRIDGEPORT, CT

CONCURRING PARTY

THE MARY & ELIZA FREEMAN CENTER FOR HISTORY AND COMMUNITY

By: Maisa L. Tisdale

Date 10/18/2019

Name: MAISA L. TISDALE

Title: PRESIDENT / CEO

EXHIBIT A

RESILIENT BRIDGEPORT PROJECTS IN DRAFT ENVIRONMENTAL IMPACT STATEMENT

RESILIENT BRIDGEPORT PROJECTS IN FINAL ENVIRONMENTAL IMPACT STATEMENT

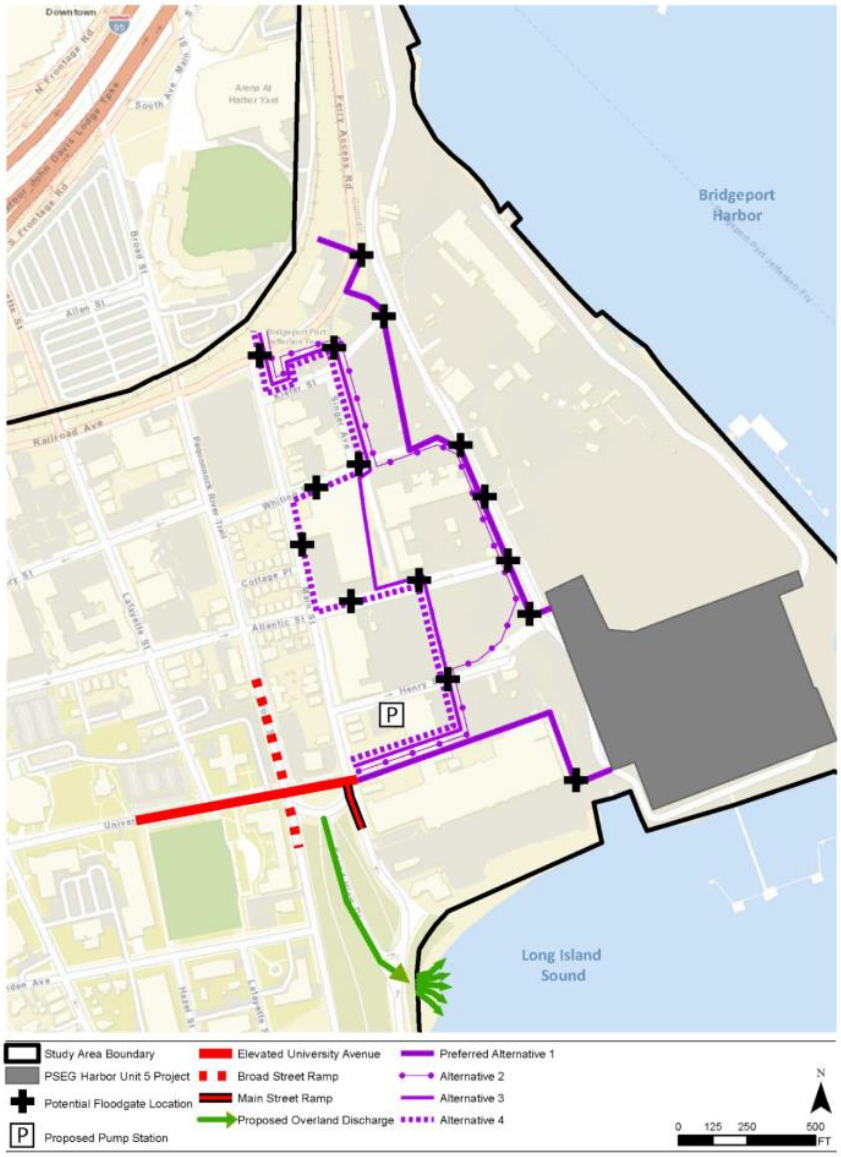

EXHIBIT B

AREA OF POTENTIAL EFFECTS

EXHIBIT C

HISTORIC PROPERTIES IN THE APE

Property Name	NR Listed (indiv.)	NR Listed (district)	NR Pot. Elig. (indiv.)	NR Pot. Elig. (district)	SR Listed Only	LHD
Seaside Park	X					
Tongue Point Lighthouse	X					
Freeman Houses	X					
Seaside Institute	X					
Park Apartments	X					
Willam D. Bishop Cottages Development Historic District		X				
Barnum/Palliser Historic Distict		X				X
Marina Park Historic District		X				X
Seaside Village Historic District		X				
Walters Memorial AME Zion Church			X		X	
Bridgeport Storage Warehouse Company			X			
Crown Corset & Crown Paper Box Company Factories			X			
D. M. Read Company Warehouse			X			
Carstensen Hall			X			
Ingleside Hall			X			
Waldemere Hall			X			
Wisteria Hall			X			
247 Atlantic Street			X			
337-341 Broad Street			X			
Seagrove Cottage			X			
Housing on Park Avenue & Atlantic & Gregory Streets (24 houses)				X		
Myrtle Avenue Housing (7 houses)				X		
New York, New Haven & Hartford Railroad				X		
Bassick Company Factory				X		
Warner Brothers Company Factory				X		

ATTACHMENT 3: PUBLIC AND AGENCY COMMENTS ON THE FEIS

Response to Comments

#	Commenter Code	Topic	Comment	Response to Comment
1	1	RBD Pilot	Will the raising of Johnson and Columbia Streets as part of the Johnson Street extension under the RBD Pilot project impact the northwest corner of the Johnson / Columbia / Park Terrace block and the Bridgeport Neighborhood Trust project to be constructed in that location?	Yes, Johnson and Columbia Streets will be elevated at that corner, sloping down to the east and south in order to meet current grade. CT DOH will coordinate with Bridgeport Neighborhood Trust as design on the RBD Pilot project continues so the two projects can be integrated.
2	2	60 Main	As developer of the 60 Main Street site, concerned about the potential impact of the flood wall through the site, particularly design implications from the turn south at the eastern end and the space taken up by the pump station.	Please note that the area identified as the location of the pump station is just conceptual and will not take up a significant amount of space (approximately 75' x 75'). As design progresses, CT DOH's Project Team will coordinate with the 60 Main Street developer to integrate the coastal flood defense system with the plans for the site.
3	2	60 Main	The design of the residential portion of the 60 Main Street project includes raising the first floor significantly above the existing grade, where it would be well above storm surge or flooding.	Elevation of the site is important but dry egress is also required (see response to comment 5).
4	2	60 Main	Significant amounts of time and money have been expended in planning the 60 Main Street project and the delays due to the Resilient Bridgeport project have cost money and hurt the ability of the project to move forward.	As stated in the FEIS, the Resilient Bridgeport project is needed to provide dry egress to the 60 Main Street site. The time taken was needed to develop the best option for the project and the various stakeholders.
5	2	Dry Egress	EIS says that both Marina Village/Windward Apartments and 60 Main Streets need the Rebuild by Design to go forward in order to provide dry egress. I do not believe this is the case. The design of the project includes substantial elevation to the site. Page 3-19 of the FEIS states only Marina Village/Windward Apartments require dry egress, but page 3-3 includes 60 Main Street (this should be removed).	In correspondence from Robert Kaliszewski at CT DEEP to Cynthia Petruzzello at the Department of Economic & Community Development dated October 18, 2017, CT DEEP indicated that DECD shall require that the developer construct a dry access pathway leading from the site ("60 Main Street") to a location outside of the coastal floodplain to serve as an egress pathway during flood events prior to the issuance of the certificate of occupancy, as a special condition of an exemption request from Section 25-68d(b)4 of the

#	Commenter Code	Topic	Comment	Response to Comment
				Connecticut General Statutes for the 60 Main property since the proposed activities will not promote long-term nonintensive floodplain uses nor have utilities located to discourage floodplain development. Page 3-3 discusses both the Marina Village/Windward Apartments and 60 Main Street sites, while page 3-19 is only using Marina Village/Windward Apartments as one example. Page 3-3 states, "Although the projects are not part of the Proposed Action, both the redevelopment of the Marina Village/Windward Apartments site and development at 60 Main Street, as currently planned, depend on the Proposed Action to be complete prior to construction in order to provide dry egress for future residents. It is assumed that without the Proposed Action, the design for these redevelopment projects would be altered to provide the necessary dry egress and incorporate other flood risk reduction measures to allow the projects to move forward." The second sentence was included in the FEIS to clarify that in the absence of the Resilient Bridgeport projects the requirement for dry egress for the 60 Main Street site as described in the CT DEEP letter still stands and would have to be met in another way. No change to the FEIS is needed.
6	2	60 Main	On page 5-4 of the FEIS, it should be clearly noted that the development of 60 Main Street is the result of previously obtained zoning and other required approvals with a design that incorporated its proximity to water and dry egress.	Comment noted. The FEIS will not be revised but this change is recorded in this ROD. Please note the dry egress requirement in the CT DEEP letter described in Response #5 above.
7	2	60 Main	The delay caused by the finalization of the EIS has not only impacted the upland portion of the 60 Main Street	Comment noted. The work proposed for the Resilient Bridgeport projects should not impact the marina and

#	Commenter Code	Topic	Comment	Response to Comment
			development, but also the marina and waterfront portions of the project. We received a short extension that requires additional expense and we may have to commence construction very soon in order to avoid the loss of our rights to develop.	waterfront portions of the 60 Main Street development. Those projects may be able to proceed without final design of the coastal flood defense system and should not interfere with construction. CT DOH's Project Team will coordinate with the 60 Main Street development.
8	3	Construction	The schedule and impact on campus continues to be the University of Bridgeport's greatest concern.	Comment noted. Due to the CDBG-DR requirements, schedule is vitally important to Resilient Bridgeport's implementation as well. CT DOH's Project Team will work closely with the University of Bridgeport to develop a construction schedule that is compatible and minimizes impacts to campus operations.
9	3	University Ave	The alignment of the structure [coastal flood defense system] on University Avenue has been shown south of the street curb line.	The figures in the FEIS are conceptual and do not reflect the exact location relative to the street curb line. The 30% engineering and design drawings were shared with the University of Bridgeport as a further refinement of the location of the coastal flood defense system and they can provide the University of Bridgeport with a more accurate alignment. Further refinements of the alignment of the sheet piling along University Avenue will be prepared during the next phase of design and shared with the University of Bridgeport for review.
10	4	CSO	What does it mean when actual treated sewage water released into Long Island Sound is separated? Separated into how many lines and where are these lines of treated sewage going?	Sewer separation, which will be implemented by the Bridgeport WPCA as part of multiple planned projects throughout Bridgeport, means that current combined sewer overflow (CSO) systems would be converted to a two-line system where runoff (relatively clean water from roadways and other impervious surfaces) are separated from sewage systems which are directed to a wastewater treatment plant, such as the West Side wastewater facility near the South End.

#	Commenter Code	Topic	Comment	Response to Comment
11	4	Green Infrastructure	How is the green infrastructure going to supplement new drainage systems and protect Long Island Sound and the public?	The green infrastructure proposed by the Resilient Bridgeport projects, such as the stormwater park at the RBD Pilot Project and the overland discharge through Seaside Park for the Flood Risk Reduction Project, will use natural measures to treat runoff, reducing the burden on the wastewater treatment plants and cleaning/filtering water before it is discharged to Cedar Creek Reach or Long Island Sound. Green infrastructure approaches are considered a best practice by the CT DEEP for removing pollutants in surface water runoff that contribute to an overabundance of nutrients in the Sound, leading to algal blooms that cause low-oxygen conditions leading to fish kills and other impacts. Contaminated runoff also contributes to higher levels of bacteria that close beaches and prevent the consumption of fish and shellfish from the Sound.
12	4	WPCA	Will Bridgeport WPCA have a different role in this after project completion?	It is the CT DOH's understanding that the WPCA will continue to maintain the CSO separation projects described in Response #10 in the study area after the Resilient Bridgeport projects are constructed.
13	4	Water Treatment	Is treated water recycled solutions in play during heavy rainfall/spillage or temporary storage tanks provided for the treated sewage overflows?	The stormwater park at Marina Village/Windward Apartments and the overland discharge through Seaside Park (along Soundview Drive converted to a vegetated basin) will serve as temporary storage during heavy rainfall events. Water will be retained in these areas, be naturally cleaned by the green infrastructure prior to discharge to the waterways. This eliminates the need for storage tanks. The Resilient Bridgeport projects do not incorporate treated water recycling solutions.
14	5	Construction – Transmission Lines	The [coastal flood defense system] cannot, as a practical manner, be constructed in the proposed location [for the Preferred Alternative] at the northern boundary of the Bridgeport Energy site. The flood wall as proposed would	CT DOH's Project Team is aware of this issue through previous conversations with Bridgeport Energy plant staff. CT DOH recognizes this as an area of concern and does not want to cause any power outage as a result of construction.

#	Commenter Code	Topic	Comment	Response to Comment
			run under the Bridgeport Energy power plant's high-voltage electric transmission lines at the northeastern corner of the property. The high-voltage electric transmission lines between the power plant and utility substation are approximately 35 feet above the ground at their lowest point. We believe the placement of the flood wall directly under the high-voltage electric transmission lines is both unworkable and inherently unsafe. Construction work near electric transmission lines is subject to strict regulation, including minimum approach distance (both horizontal and vertical) based on the transmission line's voltage, clearances between energized conductors and clearance to roads, water, supports, ground and ungrounded structures, and establishes grounding standards. If the construction equipment and procedures cannot comply with the applicable codes, the transmission lines would have to be de-energized during construction of the flood wall and installation of sheet piling under those transmission lines. De-energizing the transmission lines would prevent Bridgeport Energy from exporting its electrical generation to the regional grid. In addition, de-energizing the lines is subject to ISO New England limits on timing and disruptions in transmission and would require ISO-NE approval for the outage, which could significantly delay construction of a flood wall under the transmission lines. For example, Bridgeport Energy's outages for scheduled plant maintenance, typically 12 to 14 days in the spring and fall, are scheduled and approved as much as a year or more in advance.	CT DOH can work with Bridgeport Energy to schedule construction under the high-voltage electric transmission lines during the plant's scheduled outages in the spring or fall as noted in Bridgeport Energy's comments. In addition, CT DOH's Project Team will incorporate any necessary worker safety requirements into contractor bid documents.
15	5	Coastal Flood Defense System – Design	Structures near electrical transmission lines must also be designed and grounded to prevent arcing. As a result, the sheet piling and the design of the wall may have to be modified, especially because the wall will be in contact with	As design progresses, CT DOH's Project Team will work with Bridgeport Energy to ensure the coastal flood defense system incorporates the necessary engineering controls to prevent arcing. This may require elevating the transmission lines and reviewing the flood wall materials for conductivity when in

#	Commenter Code	Topic	Comment	Response to Comment
			seawater during stormwater surge events, which would alter the materials' conductive characteristics.	contact with sea water. The coastal flood defense system designs presented in the FEIS are at a conceptual level. These are issues that will need to be addressed as part of final design.
16	5	Coastal Flood Defense System Alignment	The [coastal flood defense system] should not abut the northern boundary of the Bridgeport Energy parcel or the eastern boundary of the United Illuminating parcel. The [alignment] can, however, extend north from Bridgeport Energy's eastern property line, along the route of the access way, in order to avoid the high-voltage electric transmission lines. We understand that the alignment would bisect the PSEG property and traverse PSEG's coal ash pile, requiring further discussion between the State and PSEG.	Straightening the coastal flood defense system alignment as proposed would increase the amount of land protected from future storm events and taken out of the 1% annual chance floodplain, with no additional environmental consequences. However, as noted, the alignment would bisect PSEG property, requiring further consultation with the property owner. CT DOH does not consider this proposed minor alteration to the Preferred Alternative 1 alignment as requiring a change to the FEIS; rather any change of this type to the Preferred Alternative 1 will be resolved as part of the negotiation of easements for construction with the property owners involved. Although the CT DOH recognizes the benefits to the Resilient Bridgeport project of the proposed minor alteration of the alignment, as noted in Response #14 and #15, it is possible to construct the Preferred Alternative 1 alignment as described in the FEIS.
17	5	Construction – Vibration	The FEIS notes that vibration may occur during construction of the [coastal flood defense system]. The Bridgeport Energy power plant relies on instrumentation that is sensitive to vibration. As a result, construction methods must be modified so as to not interfere with the power plant's instrumentation. Bridgeport Energy is happy to meet with the engineers working on the [coastal flood defense system] to work through the details.	The CT DOH Project Team will consult with the utility companies regarding vibration from construction and incorporate recommendations, as appropriate and thanks Bridgeport Energy for their offer to meet with the CT DOH Project Team's engineers.
18	5	Hazardous Materials	The FEIS does not take into account the environmental investigation and remediation work that has already occurred on the Bridgeport Energy parcel. As a result, the FEIS discuses performing investigation work that is not needed	The additional environmental data from the environmental investigation and remediation work on the Bridgeport Energy parcel will be helpful for the Project Team to review. Additional investigations will not be performed if they are not

#	Commenter Code	Topic	Comment	Response to Comment
			and does not include soil management requirements that will be needed at the Bridgeport Energy parcel. Bridgeport Energy recommends that the FEIS be amended to incorporate the investigation and remediation records for the parcel. In particular, Appendix D of the FEIS did not acknowledge the 2015 Verification of Remediation on file for the Bridgeport Energy site (audited and approved by CTDEEP) and instead recommended that a Phase II be performed for all areas of intrusive activities. Phase II, Phase III and remedial work (including an institutional control) has already been completed at the Bridgeport Energy site. There would be no need to conduct additional investigations, except as needed for soil management and disposal purposes.	necessary for data collection purposes. As design continues, including development of a sampling and analysis plan, the Project Team will evaluate all available data. The CT DOH Project Team will contact Bridgeport Energy and CT DEEP to obtain this data or Bridgeport Energy may share it directly with the CT DOH's Director of Resilience, Rebecca French as the Point of Contact for the Resilient Bridgeport project.
19	5	Groundwater	WSP may not be aware of the measurements of groundwater depth and quality contained in that report and associated reports. This data may be relevant to both the design and stormwater system improvements and to the construction specifications for the [coastal flood defense system] near the Bridgeport Energy property.	Comment noted. WSP is the lead consultant for the CT DOH's Project Team for the design and engineering of Resilient Bridgeport. The CT DOH Project Team will review the available reports and add the data to the groundwater data that has already been collected for the project.
20	5	Archaeological Surveys	Because the Bridgeport Energy power plant is located on comparatively recent, made land, we believe that archaeological surveys are not needed for the portion of the [coastal flood defense system] abutting the Bridgeport Energy property.	The Historic and Archaeological Resources Evaluation Report in Appendix C of the FEIS evaluated the historic shoreline of the South End. All available data will be evaluated to determine the need for surveys or sampling in specific areas to be impacted during construction of the projects.
21	6	Coastal Flood Defense System Alignment	United Illuminating (UI) is most supportive of the Preferred Alternative 1 alignment. Moreover, UI believes the Preferred Alternative 1 alignment can be further improved as Resilient Bridgeport adopts a straighter derivative of the proposed path.	See response to comment 16.

#	Commenter Code	Topic	Comment	Response to Comment
22	6	Coastal Flood Defense System Alignment	The Preferred Alternative 1 alignment is proposed to extend across the northeastern section of PSEG's property that is situated north of Ferry Access Road. PSEG intends to transfer that section of property to UI and UI intends to use it as part of the Pequonnock Substation Project. As presently depicted, the Preferred Alternative 1 alignment of the floodwall is proposed to cross a section of PSEG's property and continue in a northerly direction that would cause the floodwall to sever a portion of the property into two separate parcels.	It is not CT DOH's intention to bisect the northern PSEG property to be transferred to UI for the Pequonnock Substation Project. The figures in the FEIS are conceptual and should represent the coastal flood defense system alignment following the parcel line. As design progresses and as easements are developed, the Project Team will refine the alignment to match the exact property lines, where appropriate.
23	6	Utilities – University Avenue	UI requires additional information from Resilient Bridgeport to assess the potential impacts of the Flood Risk Reduction Project plan to raise a portion of University Avenue. UI is in the early stages of assessing and identifying what gas and electric distribution equipment may require removal, relocation, and reconstruction to accommodate the intended elevation of University Avenue. Over the coming months, it will be important for personnel of Southern Connecticut Gas Company and UI (collectively, the UIL Companies) to meet with Resilient Bridgeport to best understand what needs to be done to ensure safe and successful completion of the Flood Risk Reduction Project.	CT DOH appreciates UIL Companies' offer to confer on the potential for impacts to utilities along University Avenue. CT DOH similarly wants to ensure the project is implemented safely. As design progresses, the Project Team will consult with UIL Companies to review detailed design drawings and discuss construction methodology.
24	7	Coastal Flood Defense System Alignment	PSEG notes that Alternative 1 is incorrectly described in Section 3.3.4 as: "[t]he alignment then <u>would run almost entirely along the PSEG property</u>, before crossing Ferry Access Road and tying into a northern section of the CTDOT New Haven line railroad viaduct." (emphasis added). It is more accurately described in Section 4.5.2.3 (page 4-66) as "[t]his alternative <u>would run almost entirely along private property owned by PSEG, Bridgeport Energy and future UI Pequonnock Substation site,</u> before crossing	CT DOH agrees that the text in Chapter 4 is more descriptive and the intention was to use that same text throughout the document. We do not believe the alternate text appearing once elsewhere in the document warrants a change to the FEIS, but it is noted in this ROD that the CT DOH's preferred description of the Preferred Alternative 1 alignment is "this alternative would run almost entirely along private property owned by PSEG, Bridgeport Energy and future UI Pequonnock Substation site, before crossing Ferry Access Road and tying into the CTDOT New Haven Line

#	Commenter Code	Topic	Comment	Response to Comment
			Ferry Access Road and tying into the CTDO New Haven Line viaduct…) (emphasis added).	viaduct…)." This description is consistent with figures in the FEIS showing the Preferred Alternative 1 alignment along these property boundaries.
25	7	Hazardous Materials	PSEG questions the risk ranking of its property as "high" in Table 4.6.3 given the amount of investigation and remediation completed on its property to date. Particularly since other property owners with similar "contaminants of concern" only received a "moderate" rating.	Comment noted. It is possible that the risk ranking did not take into consideration all the available data. The ranking is for comparison between sites and has no regulatory bearing. As design continues, including development of a sampling and analysis plan, the Project Team will evaluate all available data.
26	7	Easement	Section 3.3.4 notes that Alternative 1 is "dependent on multiple easements from private entities for construction and maintenance. Per direction from HUD, those easements cannot be executed until after the completion of the environmental review process…" PSEG notes that negotiating the proper easements for the location of the flood wall, including the scope, duration and requirements of the easement to the satisfaction of CT DOH and PSEG is an essential component in the feasibility of the flood wall in the proposed Alternative 1 location. Section 6.5.1 states that "PSEG provided input on the alignment alternatives and is supportive of the Preferred Alternative (Alternative 1) that would require an easement on PSEG property." PSEG's support is necessarily contingent on the negotiation of an acceptable easement and the CT DOH's addressing the other concerns set forth in this comment letter.	Comment noted. CT DOH will work with PSEG to address their concerns and negotiate the required easement prior to construction of the impacted area of the coastal flood defense system.
27	7	Hazardous Materials	<u>Commitment to T-Wall Design:</u> In response to PSEG's concerns regarding the possibility of CT DOH encountering impacted soils during construction of the flood wall, CT DOH has committed to the installation of a T-wall design which will eliminate the removal of soils along PSEG's property. Further, CT DOH committed that if any impacted	CT DOH has determined that the T-wall design would be appropriate for the coastal flood defense system in order to eliminate the need for soil removal in areas of potential contamination. That level of design detail was not needed for the FEIS, but is intended to be integrated into final design. PSEG's description of the soil management is consistent with

#	Commenter Code	Topic	Comment	Response to Comment
			soils are excavated, CT DOH will properly remove the soils off-site and sign the disposal records as the generator.	the discussions and written exchanges between the CT DOH and the PSEG to date. Written agreements between CT DOH and PSEG addressing soil management will be prepared prior to any commencement of site work.
28	7	Dry Egress - PSEG	Restricted Access: The construction of the flood wall will result in the PSEG property becoming land-locked with no off-site access during flood events. PSEG has informed CT DOH that their employees and site occupants must have access off the site, including for safety reasons during a storm event. Further, the City of Bridgeport's emergency services must have the ability to access PSEG's property during storm events, for example, in the event of a fire. PSEG requested that CT DOH design and construct a ramp for off-site access.	CT DOH understands that due to the elevation of the Harbor Unit 5 site, a ramp is required for PSEG to access the dry egress following construction of the coastal flood defense system. The current conceptual plan is for the existing ramp (earthen embankment), created for construction of Harbor Unit 5 by PSEG, be replaced. The specifics of the design will be refined in consultation with PSEG and commitments identified in the easement to be executed following this ROD.
29	7	Stormwater	Stormwater: PSEG recommends that CT DOH ensure that additional steps and caution be implemented to ensure that the existing stormwater sewer system is not over-taxed and further degraded.	The Flood Risk Reduction Project incorporates both the coastal flood defense system and stormwater infrastructure projects to ensure that there will be no impacts to the existing stormwater sewer system. In addition, CT DOH is coordinating with the Bridgeport WPCA as they implement CSO separation projects on the east side of the South End and at Seaside Village, which will further improve the stormwater sewer system in the area.
30	7	Utilities	A number of companies and utilities have operated in the South End of hundreds of years. The Project should be prepared to encounter various underground utility lines (known and unknown). The Project should take appropriate health and safety and construction measures to identify and deal with these lines without interrupting residential and commercial use in the South End.	Comment noted. Health and safety measures will be incorporated into the contractor's bid documents.

#	Commenter Code	Topic	Comment	Response to Comment
31	7	Easement	Post-Construction Concerns: As previously noted, easement agreement must be drafted. The parties need to negotiate appropriate access rights. PSEG's property has restricted access 24/7 and CT DOH cannot access the site without proper notice and following safety protocols. PSEG understands that there are limited funds for the on-going inspection and maintenance requirements of the flood wall post-construction. Therefore, PSEG will need assurances that the State of Connecticut can identify and lock in funds to complete these tasks into perpetuity and that the obligations and costs associated with them do not fall upon the property owners along the flood wall.	Comment noted. Access and safety requirements will be outlined in the easement and CT DOH will provide assurances that inspection and maintenance of the coastal flood defense system will not be a responsibility of PSEG. As described in Section 9.0 of this ROD, the CT DOH will develop an Operations and Maintenance (O&M) Plan for the Preferred Alternative.
32	7	Coastal Flood Defense System Alignment	Proposed Realignment of Alternative 1: Bridgeport Energy/Cogentrix plans to submit a comment letter on the FEIS that will recommend the adjustment of a portion of Alternative 1 to place the flood wall further from its high-tension lines claiming it is both unworkable and inherently unsafe. Although PSEG understands the concern, the realignment portion Alternative 1 proposed by Bridgeport Energy/Cogentrix would relocate the proposed flood wall of Alternative 1 further onto PSEG's property. PSEG opposes this proposed realignment because it will place unnecessary burdens and expenses on PSEG's property.	Comment noted. See response to comment 16. While CT DOH recognizes the suggested change has additional benefits to the Resilient Bridgeport project, the Preferred Alternative 1 in this ROD is feasible. CT DOH understands the suggested change to this alignment bisects PSEG property.
33	8	Programmatic Agreement – Resilience Center	The Resilience Center functions referenced in the Programmatic Agreement (PA) [draft version distributed October 7, 2019] on page 2, paragraph 4, were designated without input from the Freeman Center and without State knowledge of the site's design. As such, we ask that the PA omit references to the Freeman Center's Resilience Center operations until discussion between the Freeman Center and CT DOH have taken place.	Following a meeting with the consulting parties on October 8, 2019, the Programmatic Agreement (PA) text was revised to note that the definition of the Resilience Center is taken from the FEIS. See the executed version of the PA in Attachment 2 of this ROD.

#	Commenter Code	Topic	Comment	Response to Comment
34	8	Programmatic Agreement – Vibration	Section II, A.2: The Freeman Center does not empower or delegate CT DOH and CT SHPO to deem what course of action is sufficient to protect its properties – the Mary and Eliza Freeman Houses – from vibrations.	Following a meeting with the consulting parties on October 8, 2019, the Programmatic Agreement (PA) text was revised to include the Freeman Center as a reviewer of the Historic Resource Construction Protection Plan specific to the Mary and Eliza Freeman Houses. See the executed version of the PA in Attachment 2 of this ROD.
35	8	Programmatic Agreement	Clarification of Section II. PROJECT REVIEW AND CONSULTATION and Section VI. DISPUTE RESOLUTION is requested.	At the October 8, 2019 consulting parties meeting, CT DOH provided clarification on those two sections. The text was unclear and changes were made further specifying the roles of the Signatories and Concurring parties in Section II and Section VI. of the Programmatic Agreement (PA). See the executed version of the PA in Attachment 2 of this ROD.
36	8	Design Review	The expanse between the first element of the Resilience Center – the Freeman Houses – and the second element – the Dead-end/raised roadway at University Avenue (bordered by the Cottage District and inhibiting access to Seaside Park) – raises several critical design issues. These require further meaningful, direct input from the Freeman Center and others in the community with intimate knowledge of the neighborhood. Since there is considerable design work to be done before plans are finalized, the Freeman Center requests the opportunity to interface with the design process directly by bringing its own team to advise and work in collaboration with the CT DOH Team. We request that additional State funding be allocated for this effort.	As discussed in the October 8, 2019 consulting parties meeting, the Freeman Center is a Concurring party to the Programmatic Agreement and reviews the 60% and 90% designs for their impacts to historic properties. As design progresses, CT DOH will continue to seek input from the public and project stakeholders through public meetings/workshops, Technical Advisory Committee and Citizen Advisory Committee meetings. The Freeman Center and their team is welcome to participate in these meetings and provide input. The CT DOH recognizes the considerable effort it takes all stakeholders to review and provide comments on the Resilient Bridgeport project and thanks them for their voluntary time. The CT DOH publicly recognizes the contributions of the public to the development of this project. At this time due to grant constraints there is no plan to provide state funds to any member of the public or stakeholder to compensate them for participation in these meetings. The CT DOH makes meeting materials, reports, etc. available electronically on the ResilientBridgeport.com website for those who wish to use those materials and strives

#	Commenter Code	Topic	Comment	Response to Comment
				to make that material understandable to the public. It is the intention of the Resilient Bridgeport project that the project benefits, once constructed, will be experienced by the public in terms of decreased flood risk, lower flood insurance costs, and public amenities of the Resilience Center and the street improvements as part of the Flood Risk Reduction Project.
37	9	General	We found the FEIS responsive to the recommendations we [USEPA] offered on the DEIS related to required permits and the management of contaminated sediment during project construction. We have no additional comments and appreciate the opportunity to review the FEIS.	Comment noted.
38	10	Permitting	DEEP previously identified the permit programs that would be involved for this project in the response to scoping and in comments on the DEIS. DEEP advises the Resilient Bridgeport design team to contact the Planning and Program Development Office to coordinate a cross-division pre-application meeting at DEEP. Subsequent meetings will be scheduled directly with the appropriate permitting group. For the initial pre-application meeting, please contact Beatriz Milne in Planning and Program Development at 860-424-3844, or by email at Beatriz.Milne@ct.gov, or Robert Hannon at 860-424-3245, or by email at Robert.Hannon@ct.gov. While preparing permit applications, consider timing the submission to allow for notice requirements and public participation.	Comment noted.
39	10	Maintenance – RBD Pilot	DEEP agrees that the creation of the 2.5-acre stormwater retention park will provide treatment for stormwater and improve water quality for Long Island Sound. A robust long-term maintenance plan designed by a professional engineer is essential in maintaining the function of the Stormwater Park such as slowing water velocity, storage, and filtering	Comment noted. As described in Section 9.0 of this ROD, the CT DOH will develop an Operations and Maintenance (O&M) Plan for the Selected Alternative.

#	Commenter Code	Topic	Comment	Response to Comment
			contaminants. DEEP recommends that DOH identify the responsible parties for long-term maintenance and work with their contracting office to ensure compliance.	
40	10	Maintenance – Flood Risk Reduction Project	A long-term maintenance plan should be developed for the flood control structures and the responsible parties identified for maintenance and floodgate operations.	Comment noted. As described in Section 9.0 of this ROD, the CT DOH will develop an Operations and Maintenance (O&M) Plan for the Selected Alternative.

-------- Original message --------
From: Nicole Desrosiers <ndesrosiers.duos@gmail.com>
Date: 9/19/19 10:33 AM (GMT-05:00)
To: "French, Rebecca" <Rebecca.French@ct.gov>, "Dickinson, Duo" <duo.dickinson@gmail.com>
Subject: Bridgeport Neighborhood Trust project at the Johnson & Columbia block

Hello Rebecca,

We are the architects for the Bridgeport Neighborhood Trust project at the Johnson / Columbia /Park Terrace block. The client forwarded us the FEIS and i see there is some talk of raising Johnson and Columbia street around the new johnson street extension road. Since i dont know exactly where this new road is i am having difficulty determining if this is going to impact the northwest corner of the block. Could you please help guide me on this? We are starting design development so this information will be crucial at this time.

Thank You,

Nicole Desrosiers
DUO DICKINSON architect
94 Bradley Road
Madison, CT 06443
Tel (203) 245-0405
Fax (203) 245-0093

****Please note my email address has changed to ndesrosiers.duos@gmail.com****

1

From: Russel Bernard [mailto:russ@westportpm.com]
Sent: Monday, September 23, 2019 9:56 PM
To: French, Rebecca <Rebecca.French@ct.gov>; Stephen Grathwohl <steve@westportpm.com>
Subject: RE: Final EIS on CT DOH website

Rebecca,

I reviewed the EIS and as we discussed, I am concerned about the potential impact of the flood wall going through the middle of the site. The jag at the eastern portion of the wall towards the sound probably has significant design implications for the project. Additionally, the pump station is using a portion of the property which will render that portion of property unusable for the project. As you know, significant amounts of time and money have been expended in planning this project over many years prior to your involvement and the submittal of the EIS. The delays have only further hurt the ability to move forward. The project has been on hold since we don't know what the final plan will be. As you know from the plans provided to you, the design of the residential portion of the project included raising the first floor significantly above the existing grade where it would be well above storm surge or flooding. Although I appreciate the need for what the EIS proposes, and am in favor of trying to get it done, the costs to the 60 Main Street development are substantial and I am not sure how to cover them.

Russ

On Sep 24, 2019, at 9:23 AM, French, Rebecca <Rebecca.French@ct.gov> wrote:

Hi Russ,

Thank you for your note. I am assuming this is an official comment on the FEIS since we are in a public comment period so I will respond formally in the response to public comment, but please know the alignment in the Final EIS is the plan. The utilities have been working well with us since we came to an understanding this summer about the best option for the project and for their properties. My design team is on notice to work closely with your team to integrate the coastal flood defense system with the plans for your property as we enter final design.

Best,
Rebecca

Rebecca A. French, Ph.D.
Director of Resilience
Department of Housing
State of Connecticut

E-mail: Rebecca.French@ct.gov
Phone: 860-270-8231
Cell: 860-381-9372

CONNECTICUT
Department of Housing

From: Russel Bernard [mailto:russ@westportpm.com]
Sent: Thursday, October 03, 2019 5:29 PM
To: French, Rebecca <Rebecca.French@ct.gov>
Cc: Stephen Grathwohl <steve@westportpm.com>
Subject: Re: Final EIS on CT DOH website

Rebecca,
You are correct, my comments to you should be considered 60 Main Street's official comments and included in the EIS and related documents.

I also noticed that the EIS says that 60 Main Street needs the Rebuild by Design project to go forward in order to provide 60 Main with dry egress. As we discussed when we first met I don't believe that is the case. The design of the project, as you know, includes substantial elevation to the site. The EIS includes Marina Village/Windward Apartments requiring dry egress which makes sense and excluded 60 Main on page 3-19. 60 Main should also be excluded on page 3-3.

On page 5-4 it should be clearly noted that the development of 60 Main Street is the result of previously obtained zoning and other required approvals with a design that incorporated its proximity to the water and dry egress. Since you have the plans for the site you can see that 60 Main Street has had to delay its work and will have to incur substantial costs to modify the design of the project. 60 Main should not have to bear these costs.

Additionally, the delay caused by the finalization of the EIS has not only impacted the land portion of the development but also of the marina and waterfront. As you know, we received a short extension that requires additional expense. We may have to commence construction very soon in order to avoid the loss of our rights to develop. This may cause more expenses in the future, especially if there are any further changes.

Thank you,

Russ

From: George Estrada [mailto:gestrada@bridgeport.edu]
Sent: Friday, September 27, 2019 11:23 AM
To: French, Rebecca <Rebecca.French@ct.gov>
Cc: David Cote <davidc@bridgeport.edu>
Subject: RE: Resilient Bridgeport - Call tomorrow

Good morning Rebecca,

Unfortunately we were not able to attend the meeting this past Monday. I would love to connect with you in the near future to discuss where things stand. The schedule and impact on campus continues to be our greatest concern. Finally the comments submitted by the University still remain to be resolved. For example the alignment of the structure on University Avenue having been shown in earlier drawing south of the street curb line. I know you have lots of moving parts in the project and you are very busy but it would be helpful at this point for us to hear where things stand.

I appreciate as always your help.

George

From: Jeraldlyn Mebane [mailto:jeraldlynnc.sc@gmail.com]
Sent: Thursday, October 03, 2019 2:02 PM
To: French, Rebecca <Rebecca.French@ct.gov>
Subject: SUBJECT: BRIDGEPORT's SEWAGE SPILLAGE REMEDIES???

Dear Ms. French:

Today, I read the reprinted article (CT Post), dated 9/20/19 about how the storm overflow water projects in City of Bridgeport will be addressed with federal dollars, but this article did not clearly explain what it means when actual treated sewage water released into the Long Island Sound is separated, as you stated. Separated into how many lines and where are these lines of treated sewage waste going? How is the Green I*nfrastructure going to supplement new drainage systems and protect the Long Island Sound and the public? Also, will the Bpt. WCPA have a different roll in this after project completion? The public needs to know more about this part of the project. (Is treated water re-cycled solutions in play during heavy rainfall/spillage or temporary storage tanks provided for the treated sewage overflows, etc?)*
Please provide more information to the public.

Sincerely,

Jeraldlyn Mebane

COGENTRIX ENERGY

Bridgeport Energy LLC

13860 Ballantyne Corporate Place
Suite 300
Charlotte, NC 28277
(704) 525-3800

October 7, 2019

BY FIRST CLASS MAIL AND EMAIL INFO@RESILIENTBRIDGEPORT.COM

Rebecca French, Director of Resilience,
Connecticut Department of Housing
505 Hudson Street,
Hartford, CT 06106

RE: COMMENTS ON FINAL ENVIRONMENTAL IMPACT STATEMENT/ ENVIRONMENTAL IMPACT EVALUATION DATED AUGUST 2019

Dear Dr. French:

Bridgeport Energy LLC (Bridgeport Energy) is submitting the following comments on the Resilient Bridgeport Final Environmental Impact Statement (FEIS) specifically as it relates to the Flood Risk Reduction component of the Proposed Action, Preferred Alternative 1. The Preferred Alternative will include installing sheet piling and seawalls with floodgates at street crossings. The proposed seawall will run north-south along the eastern border and north of Bridgeport Energy's site until it reaches the Pequonnock Substation where it would continue north along the eastern property line of the substation.

Comment 1: The seawall cannot, as a practical matter, be constructed in the proposed location at the northern boundary of the Bridgeport Energy site.

The seawall as proposed would run under the Bridgeport Energy power plant's high-voltage electric transmission lines. The area of concern is marked by the red circle on the copy of Figure 3-20, below, and depicted more clearly on Attachment A.

{N5631507}

Rebecca French
October 7, 2019

Figure 3-20. Preferred Alternative (Alternative 1)

Attachment A is an aerial photo of the circled area from the City of Bridgeport's GIS site. It depicts the northeastern corner of the Bridgeport Energy power plant, the access road to the right, the extension of Whiting Street across the approximate midline of the image and the electrical substation in the upper right corner. The image also shows the high-voltage electric transmission lines that run from the northeastern corner of the Bridgeport Energy power plant to the substation. The substation is part of the Bridgeport Energy power plant and is located on land leased to it by United Illuminating.

Bridgeport Energy exports power to the New England grid at 115,000 volts. It has a nominal rating of 535 megawatts, which is enough to power 370,000 to 400,000 homes on average, the equivalent of all of Fairfield County[1]. The high-voltage electric transmission lines between the power plant and the utility substation are approximately 35 feet above the ground at their lowest point. As proposed in Preferred Alternative 1, the sheet piling and sea wall are to be located directly under those high-voltage electric transmission lines.

We believe that placement of the sea wall directly under the high-voltage electric transmission lines is both unworkable and inherently unsafe. Construction work near electric transmission lines is subject to strict regulation, including standards promulgated by the Occupational Safety and Health Administration (OSHA) and Part 2 of ANSI C2: National Electrical Safety Code.

[1] 374,481 housing units in Fairfield County, 2013 – 2017.
https://www.census.gov/quickfacts/fairfieldcountyconnecticut

{N5631507}

2.

Rebecca French
October 7, 2019

OSHA has established a minimum approach distance (both horizontal and vertical) based on the transmission line's voltage[2]. Cranes and derricks are required to take additional steps before beginning work. The National Electric Safety Code also establishes minimum vertical and horizontal clearances, clearances between energized conductors and clearance to roads, water, supports, grounded, and ungrounded structures. It also establishes grounding standards. It is not at all clear that these codes could be complied with during construction of the proposed sea wall under the transmission lines, or that the sea wall as proposed would itself meet these codes.

Please note that structures constructed near electric transmission lines must also be designed and grounded to prevent arcing. As a result, the sheet piling and the design of the wall, in general, may have to be modified, especially because the wall will be in contact with seawater during storm surge events, which would alter the materials' conductive characteristics.

If the construction equipment and procedures cannot comply with the applicable codes, the transmission lines would have to be de-energized during construction of the sea wall and installation of sheet piling under those transmission lines. De-energizing the transmission lines would prevent Bridgeport Energy from exporting its electrical generation to the regional grid.

Bridgeport Energy is subject to the ISO New England (ISO-NE) Transmission, Markets and Services Tariff as well as its rules, protocols, procedures and other requirements. De-energizing the lines would, as a result, be subject to the requirements of ISO-NE, which imposes specific limits on the timing and duration of disruptions in transmission, among other things. For example, ISO-NE must approve Bridgeport Energy's outages for scheduled plant maintenance, typically 12 to 14 days in the spring and again in the fall, and those maintenance events are scheduled and approved as much as a year, or more, in advance. Such limits could, as a result, significantly delay construction of a sea wall under the transmission lines.

For the above reasons, the seawall should not and, as a practical matter, cannot abut the northern boundary of the Bridgeport Energy parcel or the eastern boundary of the United Illuminating parcel. The seawall can, however, extend north from Bridgeport Energy's eastern property line, along the route of the accessway in order to avoid the high-voltage electric transmission lines. A suggested modification is shown by the red line on the figure, below:

[2] 29 CFR 1926.1400 *et seq.*

Rebecca French
October 7, 2019

We understand that the alignment proposed above would bisect the PSEG property and traverse PSEG's coal ash pile. In consequence, locating the seawall as proposed above would require further discussion between the State and PSEG.

Comment 2: The FEIS notes that vibration may occur during construction of the sea wall and sheet piling. The Bridgeport Energy power plant relies on instrumentation that is sensitive to vibration, including the Steam Turbine .46 in/sec (rms) seismic vibration trip settings and the Gas Turbine (GT) seismic trip settings .58 in/sec (rms). As a result, construction methods must be modified so as not to interfere with the power plant's instrumentation.

Again, disruption of the power plant's operations has broad consequences, potentially affecting the power supply for a large area. We therefore ask that the work be performed in a manner that does not disrupt the operation of the power plant. Bridgeport Energy is happy to meet with the engineers working on the sea wall to work through details.

Comment 3: The FEIS does not take into account the environmental investigation and remediation work that has already occurred on the Bridgeport Energy parcel. As a result, the report discusses performing investigation work that is not needed and does not include soil management requirements that will be needed at the Bridgeport Energy parcel. Bridgeport recommends that the FEIS be amended to incorporate the investigation and remediation records for the parcel.

Rebecca French
October 7, 2019

In particular, the Dec. 2018 WSP Resiliency Project Report in Appendix D of the FEIS did not acknowledge the 2015 Verification of Remediation[3] on file for the Bridgeport Energy site and, instead, recommended that a Phase II be performed at all areas of intrusive activities. Phase II, Phase III and remedial work (including an institutional control) has already been completed at the Bridgeport Energy site. The 2015 verification of remediation report has been audited and approved by DEEP. There would, therefore, be no need to conduct additional investigations, except as needed for soil management and disposal purposes.

In addition, by not reviewing the 2015 Verification Report or other reports on file at DEEP, WSP may not be aware of the measurements of groundwater depth and quality contained in that report and associated reports. This data may be relevant to both the design of stormwater system improvements and to the constructions specifications for the seawall and flood gates near the Bridgeport Energy property.

Comment 4: Because the Bridgeport Energy power plant is located on comparatively recent, made land, we believe that archaeological surveys are not needed for the portion of the sea wall and flood gates abutting the Bridgeport energy property.

Please contact us if you would like additional information regarding the above comments. Thank you for your consideration.

BRIDGEPORT ENERGY LLC

James W. Crawford, Jr.
Vice President

[3] A Form II Verification was also filed on April 3, 2019, following the issuance of the WSP report. DEEP has not yet issued a Letter of No Audit or Request for Audit in connection with that filing.

{N5631507}

5.

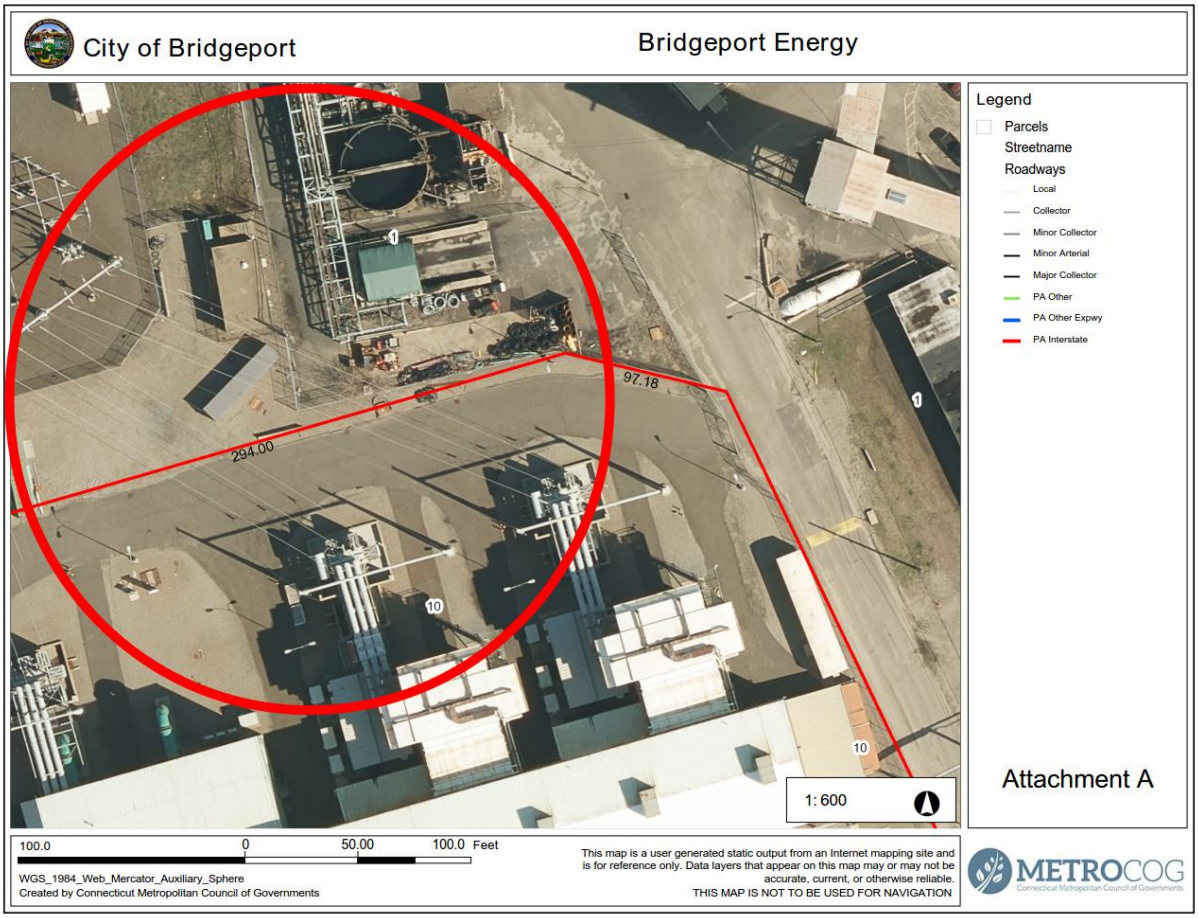
City of Bridgeport
Bridgeport Energy
Legend
Parcels
Streetname
Roadways
Local
Collector
Minor Collector
Minor Arterial
Major Collector
PA Other
PA Other Expwy
PA Interstate
97.18
294.00
1
10
1:600
Attachment A
100.0
0
50.00
100.0 Feet
WGS_1984_Web_Mercator_Auxiliary_Sphere
Created by Connecticut Metropolitan Council of Governments
This map is a user generated static output from an Internet mapping site and is for reference only. Data layers that appear on this map may or may not be accurate, current, or otherwise reliable.
THIS MAP IS NOT TO BE USED FOR NAVIGATION
METROCOG
Connecticut Metropolitan Council of Governments

Todd Berman
United Illuminating
Manager – Environmental Programs & Projects

Rebecca French, Director of Resilience
Connecticut Department of Housing
505 Hudson Street
Hartford, CT 06106

October 7, 2019

Comments of The United Illuminating Company and The Southern Connecticut Gas Company regarding the Connecticut Department of Housing's Resilient Bridgeport Final Environmental Impact Statement

Dear Dr. French,

Thank you for the opportunity to comment on the Connecticut Department of Housing's Resilient Bridgeport ("Resilient Bridgeport") Final Environmental Impact Statement ("FEIS"). The United Illuminating Company ("UI") and The Southern Connecticut Gas Company ("SCG") (collectively, the "UIL Companies") recognize the timely importance of Resilient Bridgeport's proposed flood mitigation investments that are intended to support public safety and security in the South End of the City of Bridgeport. UI is at the forefront of this effort as it undertakes a separate and unique resilience project in the South End of the City of Bridgeport.

UI plans to construct and place in-service the Pequonnock Substation Project on utility property that UI has contracted to acquire from PSEG Connecticut LLC ("PSEG") in late 2019. The Connecticut Siting Council has recognized that the Pequonnock Substation Project is necessary for the reliability of the electric power supply of Connecticut, which will serve the interests of electric system economy and reliability, and as such, conforms, to a long-range plan for expansion of the electric system serving the State of Connecticut and related interconnected utility systems. Despite looming threats of frequent and severe weather related events, coupled with the observation of sea level rise and the expectation that sea levels will continue to rise along the Connecticut coast, the completion of the Pequonnock Substation Project will ensure that UI electric customers are afforded safe and reliable service of uninterrupted electric power.

The UIL Companies' comments are particular to Resilient Bridgeport's Flood Risk Reduction project component, which proposes to construct "a coastal flood defense system comprised of raising a portion of University Avenue and installing sheet piling and floodwalls..."[1] Resilient Bridgeport has set forth four alternatives of the proposed route and alignment of the coastal

[1] FEIS Executive Summary at VIII.

Todd Berman
United Illuminating
Manager – Environmental Programs & Projects
180 Marsh Hill Rd.
Orange, CT 06477
Office (203) 499 - 3545
Cell (860) 395 – 8297
Todd.Berman@uinet.com

An equal opportunity employer

flood defense system, or floodwall, for public comment. UI is most supportive of the Preferred Alternative 1 alignment. Moreover, UI believes the Preferred Alternative 1 alignment can be further improved if Resilient Bridgeport adopts a straighter derivative of the proposed path.

More significantly, the Preferred Alternative 1 alignment is proposed to extend across the northeastern section of PSEG's property that is situated north of Ferry Access Road. PSEG intends to transfer that section of property to UI and UI intends to use it as part of the Pequonnock Substation Project. As presently depicted, the Preferred Alternative 1 alignment of the floodwall is proposed to cross a section of PSEG's property and continue in a northerly direction that would cause the floodwall to sever a portion of the Pequonnock Substation Project property into two separate parcels divided by the floodwall. From this area, the floodwall is proposed to continue until it terminates at the elevated portion of the Metro North Railroad viaduct.

UI respectfully requests that Resilient Bridgeport adjust the route of the Preferred Alternative 1 alignment so that the floodwall is constructed adjacent to or away from the Pequonnock Substation Project property line in this area. UI is committed to providing Resilient Bridgeport with the appropriate guidance and information that will assist Resilient Bridgeport in making this necessary adjustment.

Lastly, the UIL Companies require additional information from Resilient Bridgeport to assess the potential impacts of the Flood Risk Reduction plan to raise a portion of University Avenue. The UIL Companies are in the early stages of assessing and identifying what gas and electric distribution equipment may require removal, relocation, and reconstruction to accommodate the intended elevation of University Avenue. Over the coming months, it will be important for personnel of SCG and UI to meet with Resilient Bridgeport to best understand what needs to be done to ensure safe and successful completion of the Flood Risk Reduction project.

The UIL Companies appreciate the opportunity to review and comment on the FEIS and to guide the Resilient Bridgeport project team as it continues to make meaningful strides toward completion of these critical measures intended to protect the communities of the South End of the City of Bridgeport.

Very Truly Yours,

/s/ *Todd Berman*
Todd Berman
Manager – Environmental Programs & Projects
The United Illuminating Company

As agent for the UIL Companies

PSEG Power Connecticut LLC
1 Atlantic Street
Bridgeport, CT 06604

PSEG Power Connecticut LLC

October 7, 2019

By Email (Rebecca.French@ct.gov) and First Class Mail

Ms. Rebecca French
Director of Resilience
Connecticut Department of Housing
505 Hudson Street
Hartford, CT 06106

Re: Comments on Final Environmental Impact Statement/Environmental Impact Evaluation, dated August 2019

Dear Ms. French:

PSEG Power Connecticut LLC ("PSEG") has reviewed the Final Environmental Impact Statement/Environmental Impact Evaluation, dated August 2019 ("EIE") and submits the following general comments on the project described in the EIE (the "Project"):

(1) Comments on the Text of the EIE – PSEG notes that Alternative 1 is incorrectly described in Section 3.3.4 as: "[t]he alignment then would run almost entirely along the PSEG property, before crossing Ferry Access Road and tying into a northern section of the CTDOT New Haven Line railroad viaduct." (emphasis added). It is more accurately described in Section 4.5.2.3 (page4-66) as "[t]his alternative would run almost entirely along private property owned by PSEG, Bridgeport Energy and future UI Pequonnock Substation site, before crossing Ferry Access Road and tying into the CTDOT New Haven Line viaduct...) (emphasis added).

PSEG questions the risk ranking of its property as "high" in Table 4.6.3 given the amount of investigation and remediation completed on its property to date. Particularly, since other property owners with similar "contaminants of concern" only received a "moderate" rating.

Section 3.3.4 also notes that Alternative 1 is "dependent on multiple easements from private entities for construction and maintenance. Per direction from HUD, those easements cannot be executed until after the completion of the environmental review process..." PSEG notes that negotiating the proper easements for the location of the flood wall, including the scope, duration and requirements of the easement to the satisfaction of CT DOH and PSEG is an essential component in the feasibility of the flood wall in the proposed Alternative 1 location. Section 6.5.1 states that: "PSEG provided input on the alignment alternatives and is supportive of the Preferred Alternative (Alternative

1) that would require an easement on PSEG property." PSEG's support is necessarily contingent on the negotiation of an acceptable easement and the CT DOH's addressing the other concerns set forth in this comment letter.

(2) Commitment to T-Wall Design – In response to PSEG's concerns regarding the possibility of CT DOH encountering impacted soils during construction of the flood wall, CT DOH has committed to the installation of a T-Wall Design (please see documents in Attachment A) which will eliminate the removal of soils along PSEG's property. Further, CT DOH committed that if any impacted soils are excavated, CT DOH will properly remove the soils off-site and sign the disposal records as the generator.

(3) Restricted Access – The construction of the flood wall will result in the PSEG property becoming land-locked with no off-site access during flood events. PSEG has informed CT DOH that their employees and site occupants must have access off the site, including for safety reasons during a storm event. Further, the City of Bridgeport's emergency services must have the ability to access PSEG's property during storm events, for example, in the event of a fire. PSEG requested that CT DOH design and construct a ramp for off-site access.

(4) Stormwater – As noted in PSEG's prior submittal, PSEG recommends that CT DOH ensure that additional steps and caution be implemented to ensure that the existing stormwater sewer system is not over-taxed or further degraded.

(5) Underground Utility Lines – As noted in PSEG's prior submittal, a number of companies and utilities have operated in the South End for hundreds of years. The Project should be prepared to encounter various underground utility lines (known and unknown). The Project should take appropriate health and safety and construction measures to identify and deal with these lines without interrupting residential and commercial use in the South End.

(6) Post-Construction Concerns – There are a number of post-construction concerns that must be addressed. As previously noted, easement agreement must be drafted. The parties need to negotiate appropriate access rights. PSEG's property has restricted access 24/7 and CT DOH cannot access the site without proper notice and following safety protocols. PSEG understands that there are limited funds for the on-going inspection and maintenance requirements of the flood wall post-construction. Therefore PSEG will need assurances that the State of Connecticut can identify and lock in funds to complete these tasks into perpetuity and that the obligations and costs associated with them do not fall upon the property owners along the flood wall.

(7) Proposed Realignment of Alternative 1 – Bridgeport Energy/Cogentrix plans to submit a comment letter on the Final EIS that will recommend the adjustment of a portion of Alternative 1 to place the flood wall further from its high-tension lines claiming it is both unworkable and inherently unsafe. Although PSEG understands this concern, the realigned portion of Alternative 1 proposed by Bridgeport Energy/Cogentrix would relocate the proposed flood wall of Alternative 1 further onto PSEG's property. PSEG opposes this proposed realignment because it will place unnecessary burdens and expenses on PSEG's property.

Thank you for the opportunity to submit these comments for the Project's review and consideration.

Very truly yours,

John Brady
Director of Operations Services
PSEG Power LLC
40 Cragwood Rd
South Plainfield, NJ 07080

Enclosure: Attachment A

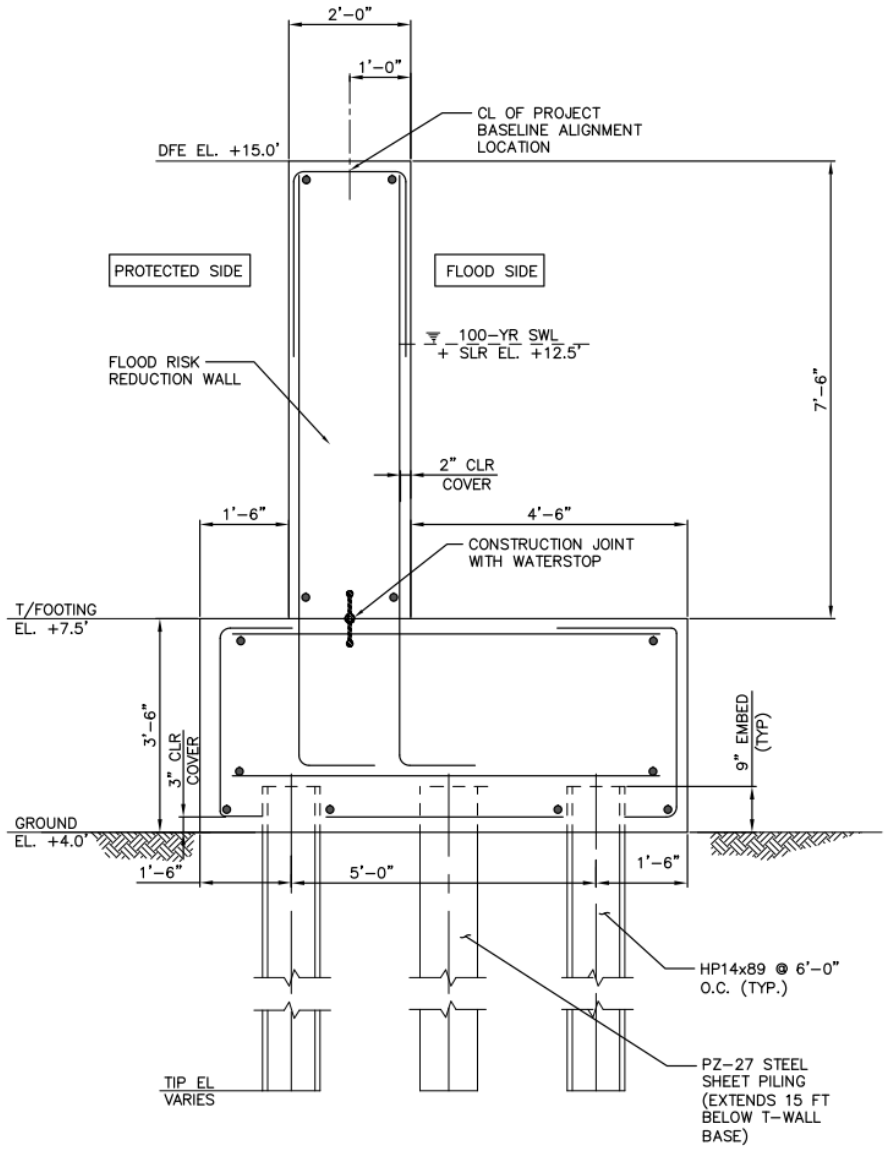
2'-0"
1'-0"
CL OF PROJECT BASELINE ALIGNMENT LOCATION
DFE EL. +15.0'
PROTECTED SIDE
FLOOD SIDE
100-YR SWL + SLR EL. +12.5'
FLOOD RISK REDUCTION WALL
7'-6"
2" CLR COVER
1'-6"
4'-6"
CONSTRUCTION JOINT WITH WATERSTOP
T/FOOTING EL. +7.5'
3'-6"
3" CLR COVER
9" EMBED (TYP)
GROUND EL. +4.0'
1'-6"
5'-0"
1'-6"
HP14x89 @ 6'-0" O.C. (TYP.)
PZ-27 STEEL SHEET PILING (EXTENDS 15 FT BELOW T-WALL BASE)
TIP EL VARIES

The Mary & Eliza Freeman Center
FOR HISTORY AND COMMUNITY, INC.

October 7, 2019

Rebecca A. French, Ph.D.
Director of Resilience
Department of Housing
State of Connecticut
505 Hudson Street
Hartford, CT 06106-7106

Dear Ms. French:

Serving as the Resilience Center is consistent with the mission and strategic priorities of The Mary and Eliza Freeman Center for History and Community (Freeman Center); nonetheless, I would like to raise the issues below for discussion and consideration:

- The Resilience Center functions referenced in the Programmatic Agreement (PA) on page 2, paragraph 4, were designated without input from the Freeman Center and without State knowledge of the site's design. As such, we ask that the PA omit references to the Freeman Center's Resilience Center operations until discussion between the Freeman Center and CT DOH have taken place.

- Section II, A.2. - The Freeman Center does not empower or delegate CT DOH and CT SHPO to deem what course of action is sufficient to protect its properties - the Mary and Eliza Freeman Houses – from vibrations.

- Clarification of Section II. PROJECT REVIEW AND CONSULTATION and Section VI. DISPUTE RESOLUTION is requested.

- The expanse between the first element of the Resilience Center—the Freeman Houses—and the second element—the Dead-end/raised roadway at University (bordered by the Cottage district and inhibiting access to Seaside Park) — raises several critical design issues. These require further meaningful, direct input from the Freeman Center and others in the community with intimate knowledge of the neighborhood. Since there is considerable design work to be done before plans are finalized, the Freeman Center requests the opportunity to interface with the design process directly by bringing its own team to advise and work in collaboration with the CT DOH Team. We request that additional State funding be allocated for this effort.

I look forward to discussing these issues.

Sincerely,

Maisa L. Tisdale
President/CEO
(203) 895-2469 cell

Mailing address:
1019 Main St., Suite 210
Bridgeport, CT 06604

UNITED STATES ENVIRONMENTAL PROTECTION AGENCY
REGION 1
5 POST OFFICE SQUARE, SUITE 100
BOSTON, MA 02109-3912

October 7, 2019

Rebecca French
Director of Resilience, CTDOH
505 Hudson Street
Hartford, CT 06106
ATTN: Resilient Bridgeport

RE: Final Environmental Impact Statement for the National Disaster Resilience and Rebuild by Design Projects, Bridgeport, Connecticut (CEQ# 20190215)

Dear Ms. French:

The U.S. Environmental Protection Agency (EPA) has reviewed the Connecticut Department of Housing Final Environmental Impact Statement (FEIS) for the Resilient Bridgeport National Disaster Resilience and Rebuild by Design Projects in Bridgeport, Connecticut. Our review was conducted pursuant to our responsibilities under the National Environmental Policy Act (NEPA), Council on Environmental Quality (CEQ) regulations (40 CFR Parts 1500-1508), and our NEPA review authority under Section 309 of the Clean Air Act.

We found the FEIS responsive to the recommendations we offered on the DEIS related to required permits and the management of contaminated sediment during project construction. We have no additional comments and appreciate the opportunity to review the FEIS.

If you have any questions regarding our comments, please contact me at (617) 918-1025.

Sincerely,

Timothy Timmermann, Director
Office of Environmental Review

Toll Free • 1-888-372-7341
Internet Address (URL) • http://www.epa.gov/region1
Recycled/Recyclable • Printed with Vegetable Oil Based Inks on Recycled Paper (Minimum 30% Postconsumer)

Connecticut Department of
ENERGY & ENVIRONMENTAL PROTECTION

79 Elm Street • Hartford, CT 06106-5127 www.ct.gov/deep Affirmative Action/Equal Opportunity Employer

To: Rebecca French, Director of Resilience, Connecticut Department of Housing

From: Linda Brunza, Environmental Analyst **Telephone:** 860-424-3739

Date: 10/7/2019 **Email**: Linda.Brunza@ct.gov

Subject: Final Environmental Impact Statement for Resilient Bridgeport: Rebuild by Design and National Disaster Resilience Projects, South End of Bridgeport.

The Department of Energy and Environmental Protection (DEEP) has received the final Environmental Impact Statement (FEIS) for the projects sponsored by the Connecticut Department of Housing (DOH) to address the susceptibility of the South End of the City of Bridgeport to chronic flooding. There are three projects planned for this area, the Rebuild by Design at Marina Village/ Windward Development, a Flood Risk Reduction project, and the Resilience Center. The following comments are for your consideration during the design and implementation of the resilience strategies.

The Final Environmental Impact Statement dated August 2019, identifies the eastern most alignment of the north-south section of the coastal flood defense system as the preferred location (Alternative 1). DEEP previously identified the permit programs that would be involved for this project in the response to scoping and in comments on the draft EIS. DEEP advises the Resilient Bridgeport design team to contact the Planning and Program Development Office to coordinate a cross-division pre-application meeting at DEEP. Subsequent meetings will be scheduled directly with the appropriate permitting group. For the initial pre-application meeting, please contact Beatriz Milne in Planning and Program Development at 860-424-3844, or by email at Beatriz.Milne@ct.gov, or Robert Hannon at 860-424-3245, or by email at Robert.Hannon@ct.gov.
While preparing permit applications, consider timing the submission to allow for notice requirements and public participation.

DEEP agrees that the creation of the 2.5-acre stormwater retention park will provide treatment for stormwater and improve water quality for Long Island Sound. A robust long-term maintenance plan designed by a professional engineer is essential in maintaining the functions of the Stormwater Park such as slowing water velocity, storage, and filtering contaminants. DEEP recommends that DOH identify the responsible parties for long-term maintenance and work with their contracting office to ensure compliance. A long-term maintenance plan should be developed for the flood control structures and the responsible parties identified for maintenance and floodgate operations.

Thank you for the opportunity to comment on the Final Environmental Impact Statement. Please contact me if you have any questions.

cc: Robert Hannon, DEEP/ Planning and Program Development
Nicole Lugli, DEEP/ Planning and Program Development
Brian Thompson, DEEP/ Land and Water Resources
Jeff Caiola, DEEP/ Land and Water Resources
Charles Lee, DEEP/ Dam Safety

Connecticut Department of
ENERGY &
ENVIRONMENTAL
PROTECTION

79 Elm Street • Hartford, CT 06106-5127 www.ct.gov/deep Affirmative Action/Equal Opportunity Employer

FLOOD MANAGEMENT

Department of Economic & Community Development
505 Hudson Street
Hartford, CT 06106

Attn: Cynthia Petruzzello

Re: **Approval of Certification & Exemption Request**
FM-201610971
60 Main Street
Bridgeport, CT

Dear Ms. Petruzzello:

The Land & Water Resources Division of the Department of Energy & Environmental Protection has reviewed the flood management certification application and exemption request prepared by Stephen Grathwohl of Westport Property Management, LLC, and signed by Tim Sullivan of the Department of Economic & Community Development ("Certifying Agency").

The certification and exemption requests submitted on September 9, 2016 and October 27, 2016 respectively state that the proposed activity has been designed in compliance with the requirements of Section 25-68d(b) of the Connecticut General Statutes (CGS) and Section 25-68h-1 through 25-68h-3 of the Regulations of Connecticut State Agencies (RCSA) with the exception of Section 25-68d(b)4 of the CGS.

Specifically, an exemption is requested from the provisions of Section 25-68d(b)4 of the Connecticut General Statutes (CGS) which requires that the proposed activities promote long-term nonintensive floodplain uses and has utilities located to discourage floodplain development.

The project consists of remediation and demolition of existing structures of the former Remington Shave Factory and construction of a mixed use development located at 60 Main Street in the City of Bridgeport, as shown on plans entitled, "60 Main Street," signed by Malcom G. McLaren, P.E., dated January 30, 2015, last revised June 12, 2015. The project is located within a designated FEMA VE & AE Special Flood Hazard Area of Long Island Sound.

The agency has determined that although the proposed development does not promote long-term nonintensive floodplain uses or have its utilities located to discourage floodplain development, it will not injure persons or damage property in the area of such activity or critical activity, has minimized the environmental impact and provides dry egress for the base flood event.

DECD
60 Main Street, Bridgeport, CT
FM-201610971
Page 2 of 3

In addition, the agency has determined that the activity is in the public interest, will not injure persons or damage property in the area of such activity or critical activity, and complies with the provisions of the National Flood Insurance Program.

Therefore, in accordance with CGS Section 25-68d(b) & (d), your request for approval of the above referenced certification and exemption is granted with the following conditions:

Special Conditions:

1. DECD shall require in accordance with Section 6.14 (Compliance with Environmental Laws) of the Department of Economic & Development's contract with the developer, that the developer construct a dry access pathway leading from the site ("60 Main Street") to a location outside of the coastal floodplain to serve as an egress pathway during flood events prior to the issuance of the certificate of occupancy. The specific design of the pathway shall be determined by the Applicant provided the pathway surface shall be set at or above elevation 14 NAVD88, be at least four (4) wide and be constructed of materials designed to support use of a wheelchair for its entire length. After completion of construction, the Applicant shall provide the Commissioner with written certification from a professional engineer licensed in the State of Connecticut that the pathway meets or exceeds the criteria described in the forgoing sentence. The pathway shall be kept free of obstructions and adequately maintained.

Operating Conditions:

1. This approval shall expire ten years after issuance or if the construction of any structures or facilities authorized herein has not commenced within three years of issuance of this approval.

2. The Certifying Agency may not make any alterations, except de minimis alterations, to any structure, facility, or activity authorized by this certification unless the Certifying Agency applies for and receives a modification of this certification. A de minimis alteration means a change in the design or operation of the authorized permit that does not increase its adverse environmental or other regulatory impacts.

3. In constructing or maintaining any structure or facility or conducting any activity authorized herein, or in removing any such structure or facility, the Certifying Agency shall employ best management practices to control storm water discharges, to prevent erosion and sedimentation, and to otherwise prevent pollution of wetlands and other waters of the State. The Certifying Agency shall immediately inform the Commissioner of any adverse impact or hazard to the environment which occurs or is likely to occur as the direct result of the construction, maintenance, or operation of structures, facilities, or activities authorized herein. Best Management Practices include, but are not limited, to practices identified in the *Connecticut Guidelines for Soil Erosion and Sediment Control* as revised, *2004 Connecticut Stormwater Quality Manual*, Department of Transportation's *ConnDOT Drainage Manual* as revised, and the Department of Transportation Standard Specifications as revised.

4. All temporary structures, cofferdams, and fill shall not impede the movement of flood flows and shall be removed at the completion of their use. The design of such temporary structure, cofferdams

DECD
60 Main Street, Bridgeport, CT
FM-201610971
Page 3 of 3

and fill shall be based on the DOT Drainage Manual, where applicable. All temporary and permanent fill shall be clean and free of stumps, rubbish, and hazardous or toxic material.

5. The Certifying Agency shall cause equipment and materials to be removed from the floodplain during periods when flood warnings have been issued or are anticipated by a responsible federal, state or local agency. It shall be the Certifying Agency's responsibility to obtain such warnings when flooding is anticipated.

This authorization is subject to and does not derogate any present or future property rights or other rights or powers of the State of Connecticut, conveys no property rights in real estate or material nor any exclusive privileges, and is further subject to any and all public and private rights and to any federal, state, or local laws or regulations pertinent to the property or activity affected thereby. No revisions or alterations to the approved plans are allowed without first obtaining written approval from this Division.

If there are any questions, contact Jeffrey Caiola of the Land & Water Resources Division at 860-424-4162.

October 18, 2017
Date

Robert E. Kaliszewski
Deputy Commissioner

cc: Stephen Grathwohl - Westport Property Management, LLC